# TECHNICAL MANUAL



## MODIX® Rebar Coupler

Safe and flexible rebar coupling system

www.fastcon.ru

Fastcon

Fastcon

# MODIX® Rebar Coupler

## Safe and flexible rebar coupling system

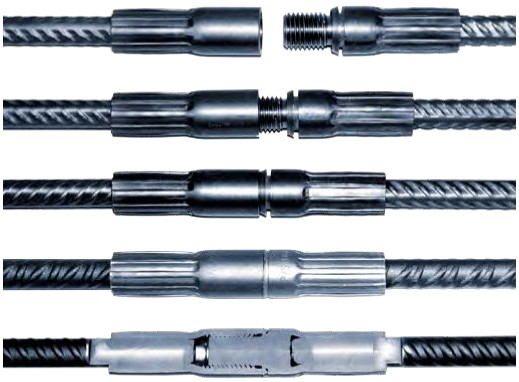

- Reduces congestion of reinforcement by eliminating lap splicing.
- Quick and easy assembly with simple tools.
- Simplifies construction of reinforced concrete structures.
- Safe and time-saving assembly control.
- ETA assessed system for static, quasi-static, dynamic and seismic actions

MODIX® Rebar Couplers are building products used to create mechanical connections between ribbed reinforcement bars in cast-in-situ and precast concrete structures. MODIX® consists of prefabricated female and male muffs with M-threads, which are pressed onto the reinforcement bars. This system provides high production speed with reliable quality. A unique visual inspection system makes the assembly process both fast and safe.

MODIX® Rebar Couplers transfer the full resistance of reinforcement bars for compressive and tensile forces in connections with straight and bent reinforcement bars of the same and different diameters. They also enable the rebar to be attached to a steel profile and to form an end anchor. MODIX® is available for rebar diameters of 10 mm to 40 mm.





**MODIX® Rebar Coupler Systems are CE marked**

# CONTENTS


About MODIX® Rebar Coupler ..... 4

1. Product properties ..... 4

1.1 Structural behavior ..... 5

1.2 Application conditions ..... 5

1.2.1 Loading and environmental conditions ..... 6

1.2.2 Execution of the connection ..... 6

1.3 Other properties ..... 6

MODIX® SM (Standard Coupler) ..... 7

MODIX® PM (Position Coupler) ..... 8

MODIX® RM (Reduction Coupler) ..... 10

MODIX® KM (Combination Coupler) ..... 11

MODIX® EM (End-Anchor Coupler) ..... 12

MODIX® AM (Weld-to Coupler) ..... 14

2. Resistances ..... 15

2.1 Fire resistance ..... 18

Annex A – Shape of reinforcement bars ..... 19

Annex B – ARBOX® Joint Reinforcement with MODIX® Rebar coupler ..... 24

Annex C – Welding seam information – MODIX® AM ..... 25

Installation of MODIX® Rebar Coupler ..... 26

# About MODIX® Rebar Coupler

## 1. Product properties

MODIX® Rebar Couplers are used to create threaded connections between reinforcement bars. MODIX® consists of a threaded coupler swaged onto a hot-rolled ribbed reinforcement bar with a diameter of between 10 mm and 40 mm. MODIX® is typically used to:

- Create continuity of reinforcement in concrete elements.
- Fix end anchors to the reinforcement bar.
- Fix the reinforcement bar to a steel profile.

**Variants of MODIX® and examples of application are shown in the table below:**

| | |
|---|---|
| **MODIX® SM Standard Coupler**<br>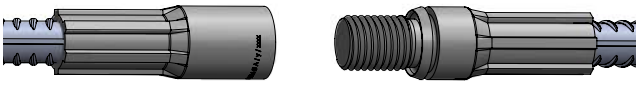 | Threaded coupler system for connecting reinforcing bars of the same diameter. MODIX® SM couplers are assessed by ETA. |
| **MODIX® RM Reduction Coupler**<br>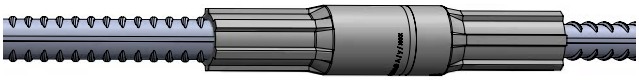 | Threaded coupler system for connecting bars of different diameters. MODIX® RM couplers are assessed by ETA. |
| **MODIX® PM Position Coupler**<br>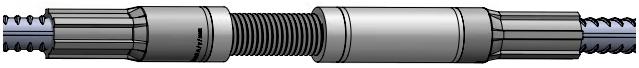 | Threaded coupler system for bars that cannot be turned and moved in an axial direction, such as tapered columns with connecting bars bent at right angles. MODIX® PM couplers are assessed by ETA. |
| **MODIX® KM Combination Coupler**<br>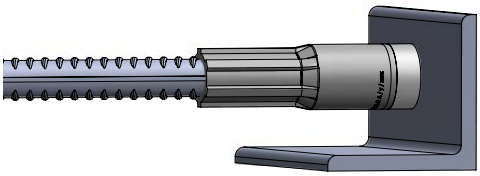 | Threaded coupler system for use as a combination coupler to connect a reinforcement bar and a metric screw. |
| **MODIX® EM End anchor Coupler**<br>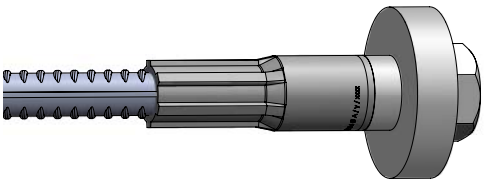 | Threaded coupler system for use as an end-anchor coupler including a standard screw and end-plate. |
| **MODIX® AM Welded-to Coupler**<br>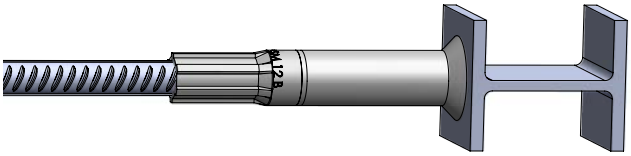 | Threaded coupler system for use as a weld-to coupler for connecting reinforcement bars and steel construction elements. MODIX® SM couplers are assessed by ETA. |

The unique visual inspection system allows MODIX® connections to be installed without using special tools such as torque wrenches. MODIX® connections allow all of the reinforcement in the concrete element to be connected in one cross section without using additional transverse reinforcement bars. This helps to avoid congestion of reinforcement in the concrete element. All-in-all, the optimized labor and material costs associated with using MODIX® make it a competitive solution compared to traditional techniques for connecting reinforcement bars (lap splicing, welding).

MODIX® Rebar Couplers can be connected inside concrete elements (*Figure 1a*), on the surface of concrete elements (*Figure 1b*), or as a protruding bar solution (*Figure 1c*).

*a)*

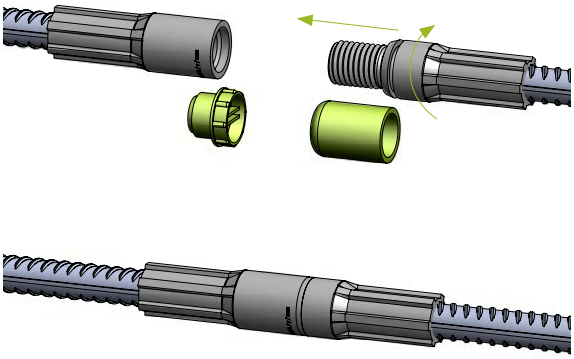

*b)*

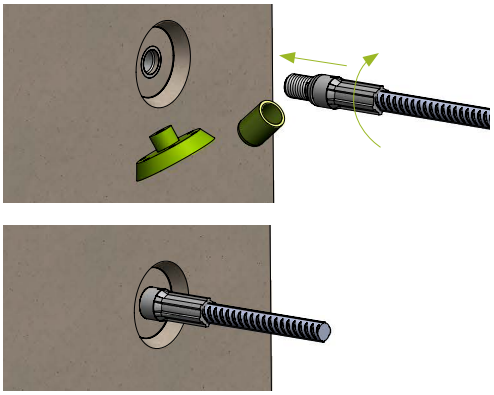

*c)*

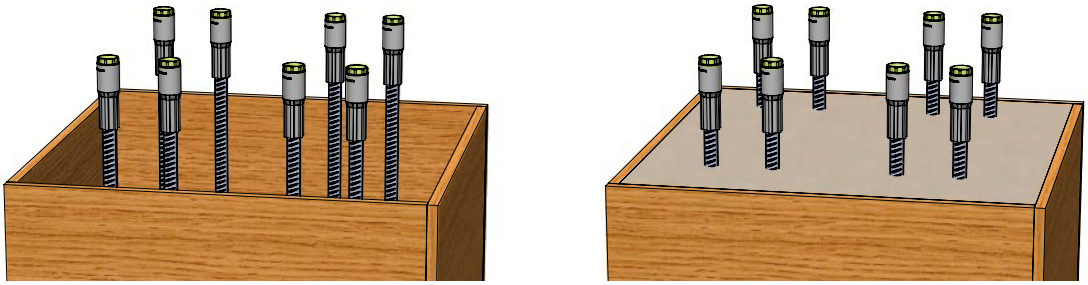

*Figure 1. a) MODIX® connected inside concrete elements MODIX® connected on the surface of the element, b) attached to formwork, c) protruding bar solution.*

## 1.1 Structural behavior

MODIX® Rebar Couplers are designed to provide slip-free bolted connections between reinforcement bars with a tensile/compressive resistance corresponding to the resistance of the connected reinforcement bar. MODIX® Rebar Couplers can be seen in the same way as unspliced continuous reinforcement bars.

## 1.2 Application conditions

MODIX® Rebar Couplers are pre-designed for use under the conditions mentioned in this chapter. If these conditions cannot be satisfied, please contact the Customer Engineering Service for custom-designed MODIX® Rebar Coupler solution.

### 1.2.1 Loading and environmental conditions

MODIX® Rebar Couplers are designed, tested and approved according to ETA 21/0084 to carry static loads, dynamic loads, and seismic loads. The couplers are made from carbon steel and can be exposed to the same environmental effects and loading situations as ordinary reinforcement bars. These properties enable MODIX® Rebar Couplers to be used in following types of structures:

- Public and commercial buildings
- Residential buildings
- Industrial buildings and structures
- Infrastructure (bridges and tunnels)
- Nuclear power plants.

The minimum thickness of concrete cover and spacing between MODIX® Rebar Couplers must be of the minimum requirements according to the environmental exposure class and intended operating life.

### 1.2.2 Execution of the connection

The properties of MODIX® connections are conditioned by proper tightening of the system in accordance with the installation instructions.

## 1.3 Other properties

The material properties of parts of the MODIX® system have the following properties:

| | |
|---|---|
| **MODIX® Rebar Couplers** | S355 EN 10025-2 |
| **Reinforcement bars** | Hot-rolled ribbed bars with characteristic yield strength of $f_{yk}$ = 450 – 500 MPa and ductility class B and C (for example B450B, B500C) |
| **Steel plate at MODIX® EM** | S355 EN 10025-2 |

Fastcon's production units are controlled externally and audited periodically on the basis of the production certifications and product approvals provided by various independent organizations.

For traceability purposes, the products bear producer identification markings and the batch number, including the type of product and number of the steel partner.

MODIX® Rebar Couplers are under continuous quality control, which includes permanent visual and dimensional control and regular tensile and fatigue testing by third parties.

## MODIX® SM (Standard Coupler)

- For connecting bars with the same diameter.
- At least one bar can be moved axially and rotated.



| Coupler type | Bar Ø $d_b$ [mm] | Coupler Ø $D$ [mm] | Length $A$ [mm] | Length $B$ [mm] | Parts $A + B$ fitted together [mm] | *ISO* Metric thread M | Thread length $l_z$ [mm] | Color of thread protector |
|---|---|---|---|---|---|---|---|---|
| SM10 | 10 | 17.5 | 52 | 46 | 96 | M 12 × 1.75 | 16.0 | Orange |
| SM12 | 12 | 21.0 | 63 | 52 | 113 | M 16 × 2 | 21.2 | Yellow |
| SM14 | 14 | 24.0 | 72 | 57 | 127 | M 18 × 2.5 | 24.8 | Blue |
| SM16 | 16 | 27.0 | 80 | 63 | 141 | M 20 × 2.5 | 27.5 | White |
| SM18 | 18 | 29 | 89 | 71 | 159 | M 22 × 2.5 | 28.6 | Light pink |
| SM20 | 20 | 33.0 | 98 | 77 | 173 | M 24 × 3 | 31.6 | Gray |
| SM22 | 22 | 36 | 111 | 88 | 198 | M 27 × 3.0 | 35.3 | Pastel green |
| SM25 | 25 | 41.0 | 122 | 98 | 218 | M 30 × 3.5 | 39.0 | Red |
| SM 26 | 26 | 44 | 131 | 101 | 232 | M 33 × 3.5 | 42.0 | Pearl gold |
| SM28 | 28 | 47.0 | 141 | 111 | 250 | M 36 × 4 | 46.0 | Black |
| SM 30 | 30 | 50 | 146 | 115 | 261 | M 39 × 4.0 | 48.0 | Turquoise blue |
| SM32 | 32 | 53.0 | 156 | 124 | 278 | M 42 × 4.5 | 53.5 | Brown |
| SM 34 | 34 | 57 | 159.5 | 135 | 291 | M 45 × 4.5 | 54.7 | Anthracite gray |
| SM40 | 40 | 63.5 | 163 | 136 | 297 | M 48 × 5.0 | 61.7 | Green |

- Parts A and Part B can be ordered separately.

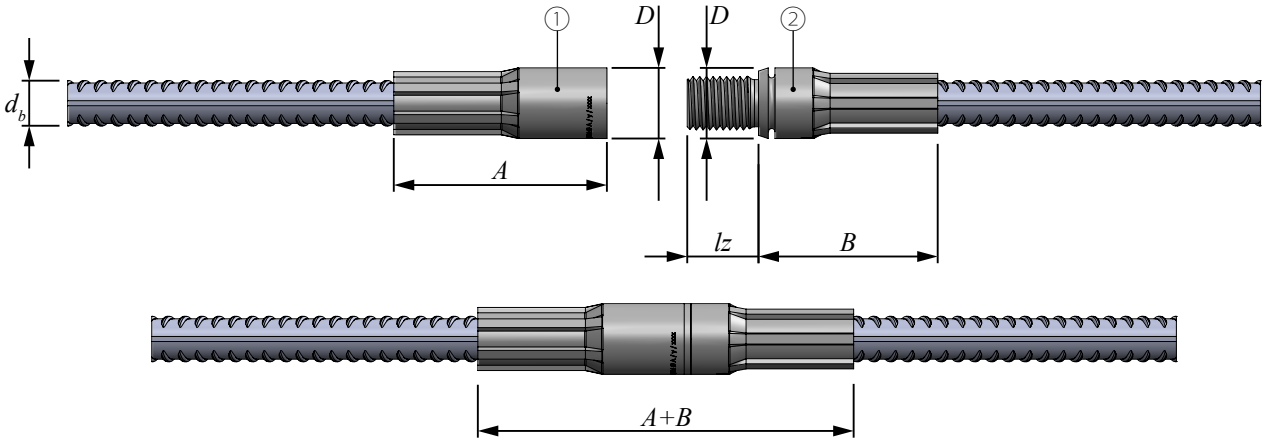


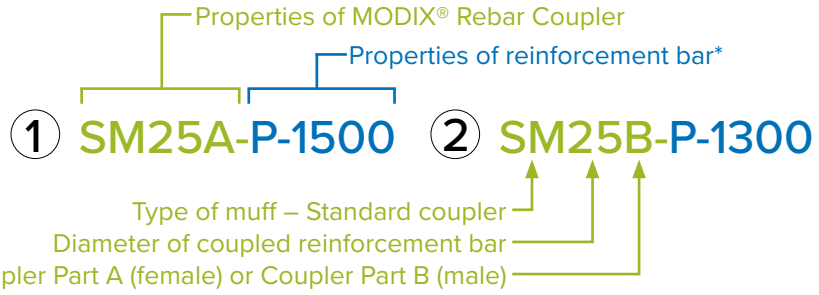




* Detailed explanations of the properties of reinforcement bars are described in Annex A.

### Application

MODIX® SM Standard Couplers are used as regular connections for reinforcement bars of the same diameters with full tension and compression capacity.

## MODIX® PM (Position Coupler)

- For connecting straight or bent bars.
- None of the bars can move axially or rotate.



| Coupler type | Bar Ø $d_b$ [mm] | Coupler Ø $D$ [mm] | Length part $A$ [mm] | Thread length Part $A$ $l_e$ [mm] | Length $l_1$ [mm] | Length $l_2$ [mm] | Length of position sleeve $l_h$ [mm] | Length of threaded bar $l_{gs}$ [mm] | Max. free spacing $l_{mont}$ [mm] | Length $L$ [mm] | *ISO* Metric thread M | Color of thread protector |
|---|---|---|---|---|---|---|---|---|---|---|---|---|
| PM10 | 10 | 17.5 | 52 | 21.0 | 58 | 95 | 37.0 | 79 | 59 | 74 | M12 × 1.75 | Orange |
| PM12 | 12 | 21.0 | 63 | 26.0 | 72 | 119 | 48.0 | 98 | 73 | 93 | M16 × 2.00 | Yellow |
| PM14 | 14 | 24.0 | 72 | 30.0 | 81 | 135 | 54.5 | 111 | 82 | 105 | M18 × 2.50 | Blue |
| PM16 | 16 | 27.0 | 80 | 33.0 | 88 | 148 | 60.5 | 121 | 89 | 115.00 | M20 × 2.50 | White |
| PM18 | 18 | 29 | 89 | 34.0 | 95 | 157 | 66.0 | 129 | 96 | 123.00 | M22 × 2.50 | Light pink |
| PM20 | 20 | 33.0 | 98 | 37.0 | 99 | 167 | 68.5 | 136 | 100 | 130.00 | M24 × 3.00 | Gray |
| PM22 | 22 | 36 | 111 | 43.0 | 108 | 186 | 75.0 | 151 | 109 | 143.00 | M27 × 3.00 | Pastel green |
| PM25 | 25 | 41.0 | 122 | 44.0 | 117 | 200 | 83.0 | 161 | 118 | 156.00 | M30 × 3.00 | Red |
| PM26 | 26 | 44 | 131 | 51.0 | 127 | 220 | 90.0 | 178 | 128 | 169.00 | M33 × 3.50 | Pearl gold |
| PM28 | 28 | 47.0 | 141 | 51.0 | 137 | 233 | 97.0 | 188 | 137 | 182.00 | M36 × 4.00 | Black |
| PM30 | 30 | 50 | 146 | 59.0 | 146 | 253 | 105.0 | 205 | 147 | 194.00 | M39 × 4.00 | Turquoise blue |
| PM32 | 32 | 53.0 | 156 | 59.0 | 155 | 267 | 112.0 | 214 | 156 | 208.00 | M42 × 4.50 | Brown |
| PM34 | 34 | 57 | 159.5 | 62.0 | 166 | 282 | 120.0 | 228 | 167 | 220.00 | M45 × 4.50 | Anthracite gray |
| PM40 | 40 | 63.5 | 163 | 65.0 | 175 | 301 | 127.0 | 240 | 173 | 234 | M48 × 5.00 | Green |

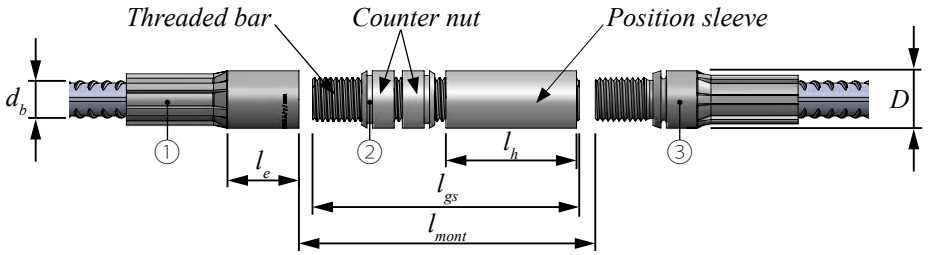


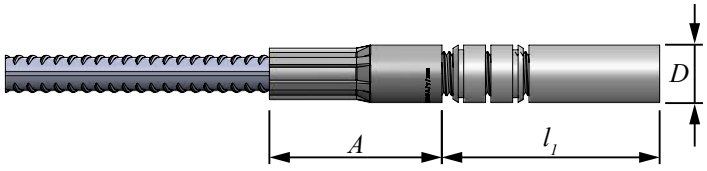


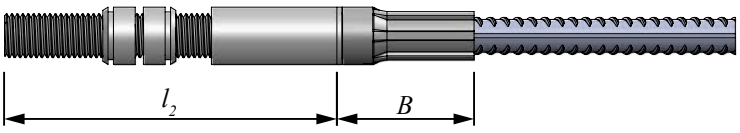


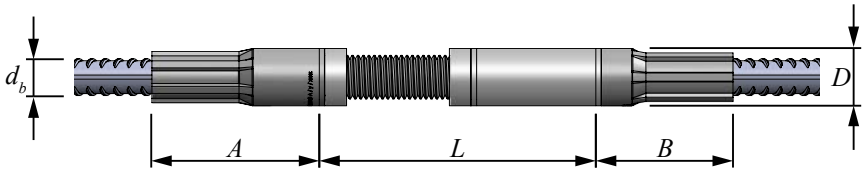

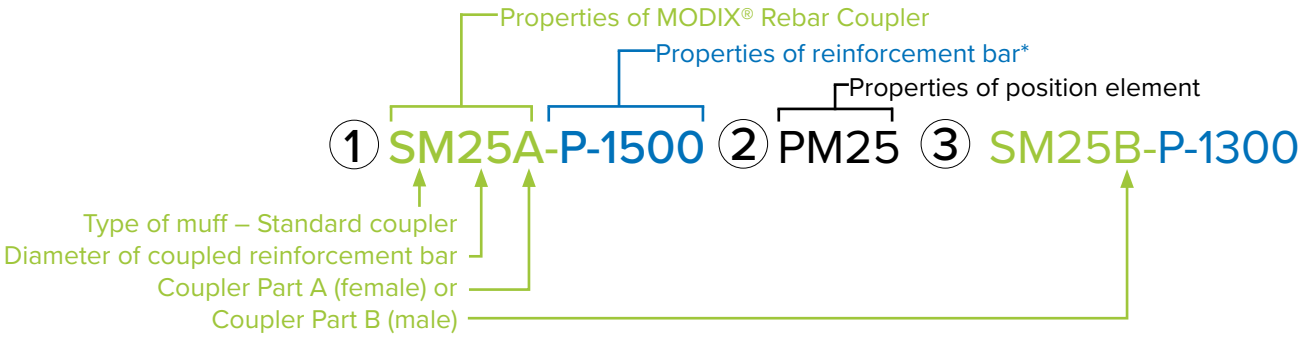


* Detailed explanations of the properties of reinforcement bars are described in Annex A.

## Application

MODIX® PM Position Couplers are used when none of the bars can rotate or move (such as the connections of bent bars).

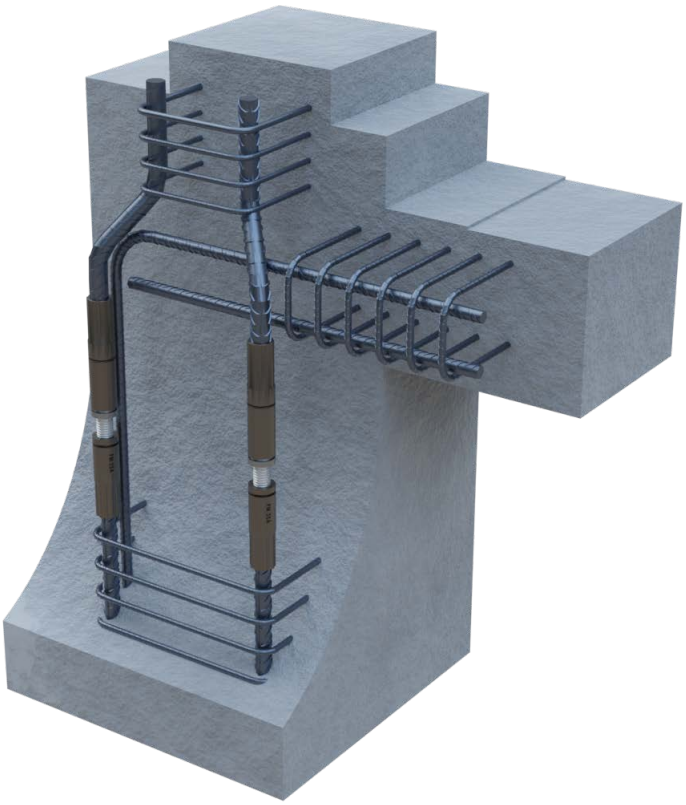

## MODIX® RM (Reduction Coupler)

- For connecting bars with different diameters.
- At least one bar can be moved axially and rotated.



| Coupler type | Bar Ø $d_b$ [mm] | Reduced bar Ø $d_2$ [mm] | Coupler Ø $D$ [mm] | Length Part $A$ [mm] | Reduced part length $RB$ [mm] | Thread length $l_z$ [mm] | Parts $A + RB$ fitted together [mm] | *ISO* Metric thread M | Color of thread protector |
|---|---|---|---|---|---|---|---|---|---|
| RM12/10 | 12 | 10 | 21.0 | 63 | 52 | 21.2 | 113 | M 16 × 2 | Yellow |
| RM14/12 | 14 | 12 | 24.0 | 72 | 57 | 24.8 | 127 | M 18 × 2.5 | Blue |
| RM16/14 | 16 | 14 | 27.0 | 80 | 63 | 27.5 | 141 | M 20 × 2.5 | White |
| RM18/16 | 18 | 16 | 29 | 89 | 71 | 28.6 | 159 | M 22 × 2.5 | Light pink |
| RM20/16 | 20 | 16 | 33.0 | 98 | 77 | 31.6 | 173 | M 24 × 3 | Gray |
| RM22/18 | 22 | 18 | 36 | 111 | 88 | 35.3 | 198 | M 27 × 3.0 | Pastel green |
| RM25/20 | 25 | 20 | 41.0 | 122 | 98 | 39.0 | 218 | M 30 × 3.5 | Red |
| RM26/22 | 26 | 22 | 44 | 131 | 101 | 42.0 | 232 | M 33 × 3.5 | Pearl gold |
| RM28/25 | 28 | 25 | 47.0 | 141 | 111 | 46.0 | 250 | M 36 × 4 | Black |
| RM30/26 | 30 | 26 | 50 | 146 | 115 | 48.0 | 261 | M 39 × 4.0 | Turquoise blue |
| RM32/28 | 32 | 28 | 53.0 | 156 | 124 | 53.5 | 278 | M 42 × 4.5 | Brown |
| RM34/30 | 34 | 30 | 57 | 159.5 | 135 | 54.7 | 291 | M 45 × 4.5 | Anthracite gray |
| RM40/32 | 40 | 32 | 63.5 | 163 | 136 | 61.7 | 297 | M 48 × 5.0 | Green |
| RM40/34 | 40 | 34 | 63.5 | 163 | 136 | 61.7 | 297 | M 48 × 5.0 | Green |

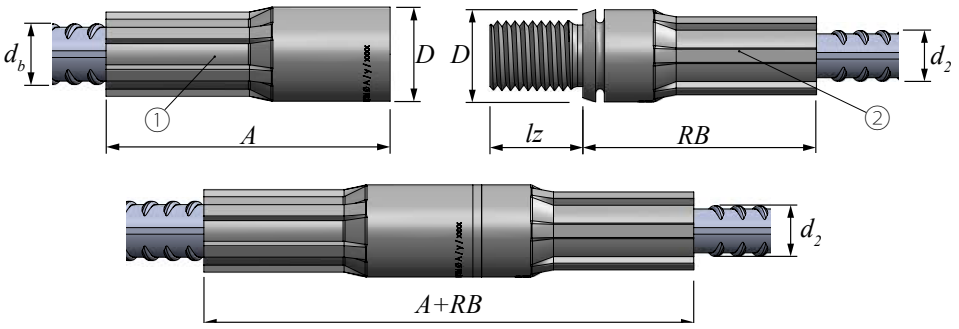


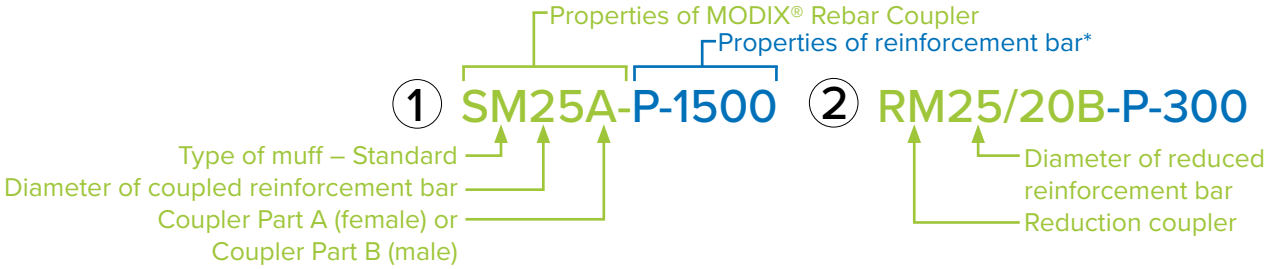


* Detailed explanations of the properties of reinforcement bars are described in Annex A

### Combinations of bar diameters

Only bars that are one size smaller in diameter can be connected (please refer to the 'Coupler type' column in the table above). MODIX® Part B (male) is commonly used for reduction. If a MODIX® Part A is to be used as reduction, please specify this when placing the order.

### Application

MODIX® RM Reduction Couplers are used when the reinforcement bar diameter should be reduced by one size with full tension and compression capacity.

## MODIX® KM (Combination Coupler)

- For connecting a reinforcement bar and a standard metric bolt.
- For tension and compression forces.
- Not covered by ETA assessment*.



| Coupler type | Bar Ø $d_b$ [mm] | Coupler Ø $D$ [mm] | Length Part $A$ [mm] | Thread length Part $A$ $l_e$ [mm] | Thickness of distance sleeve $d_s$ [mm] | Recommended thickness of steel $t$ [mm] | Thread length bolt $l_{gew}$ [mm] | *ISO* Metric thread M | Color of thread protector |
|---|---|---|---|---|---|---|---|---|---|
| KM10 | 10 | 17.5 | 52 | 21 | 9 | 10 – 14 | 40 | M 12 × 1.75 | Orange |
| KM12 | 12 | 21.0 | 63 | 26 | 10 | 10 – 14 | 45 | M 16 × 2 | Yellow |
| KM14 | 14 | 24.0 | 72 | 30 | 11 | 10 – 15 | 50 | M 18 × 2.5 | Blue |
| KM16 | 16 | 27.0 | 80 | 33 | 11 | 11 – 18 | 55 | M 20 × 2.5 | White |
| KM18 | 18 | 29 | 89 | 34.0 | 11 | 11 – 18 | 55 | M 22 × 2.5 | Light pink |
| KM20 | 20 | 33.0 | 98 | 37.0 | 12 | 11 – 18 | 55 | M 24 × 3 | Gray |
| KM22 | 22 | 36 | 111 | 43.0 | 13 | 11 – 19 | 60 | M 27 × 3.0 | Pastel green |
| KM25 | 25 | 41.0 | 122 | 44.0 | 14 | 14 – 23 | 70 | M 30 × 3.5 | Red |
| KM26 | 26 | 44 | 131 | 51.0 | 15 | 17 – 26 | 75 | M 33 × 3.5 | Pearl gold |
| KM28 | 28 | 47.0 | 141 | 51.0 | 16 | 19 – 30 | 85 | M 36 × 4 | Black |
| KM30 | 30 | 50 | 146 | 59.0 | 17 | 23 – 33 | 90 | M 39 × 4.0 | Turquoise blue |
| KM32 | 32 | 53.0 | 156 | 59.0 | 18 | 19 – 32 | 95 | M 42 × 4.5 | Brown |
| KM34 | 34 | 57 | 159.5 | 62.0 | 19 | 23 – 33 | 100 | M 45 × 4.5 | Anthracite gray |
| KM40 | 40 | 63.5 | 163 | 65.0 | 20 | 29 – 40 | 110 | M 48 × 5.0 | Green |

* MODIX® KM is not covered by the European Technical Assessment (ETA) and it is not included in the CE marking system. MODIX® KM production process and material follow same quality requirements as required by ETA.

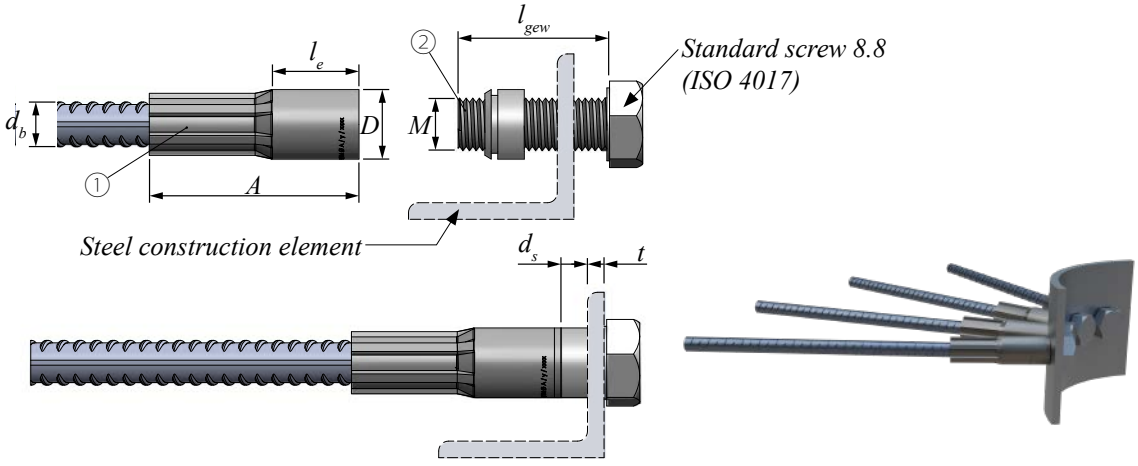





* Detailed explanations of the properties of reinforcement bars are described in Annex A.

### Calculating the required thread length of the M thread bolt:

The thread length of the M bolt used in the system must be calculated considering the thread length of coupler Part A, the thickness of the distance sleeve ($d_s$), and the steel element to which coupler shall be fixed. The recommended steel element thickness is shown in the table above.

## MODIX® EM (End-Anchor Coupler)

- Alternative to end hooks.
- Anchor or plug for reinforcement bar.
- No axial movement and rotation of SM A muff required.
- Not covered by ETA assessment*.



| Coupler type | Bar Ø $d_b$ [mm] | Coupler Ø $D$ [mm] | Length $A$ [mm] | Thread length Part A $l_e$ [mm] | Thickness of distance sleeve $d_s$ [mm] | Length fitted together $l_{ges}$ [mm] | End plate Ø $D_e$ [mm] | End-Plate thickness $t$ [mm] | Thread length of screw $l_{gew}$ [mm] | *ISO* Metric thread M | Color of thread protector |
|---|---|---|---|---|---|---|---|---|---|---|---|
| **EM10** | 10 | 17.5 | 52 | 21 | 9 | 71 | 40 | 10.0 | 40.0 | M 12 × 1.75 | Orange |
| **EM12** | 12 | 21.0 | 63 | 26 | 10 | 85 | 48 | 12.0 | 45.0 | M 16 × 2 | Yellow |
| **EM14** | 14 | 24.0 | 72 | 30 | 11 | 97 | 55 | 14.0 | 50.0 | M 18 × 2.5 | Blue |
| **EM16** | 16 | 27.0 | 80 | 33 | 11 | 106 | 63 | 15.0 | 55.0 | M 20 × 2.5 | White |
| **EM20** | 20 | 33.0 | 98 | 37 | 12 | 129 | 80 | 19.0 | 60.0 | M 24 × 3 | Gray |
| **EM25** | 25 | 41.0 | 122 | 44 | 14 | 160 | 95 | 24.0 | 75.0 | M 30 × 3.5 | Red |
| **EM28** | 28 | 47.0 | 141 | 51 | 16 | 185 | 110 | 28.0 | 90.0 | M 36 × 4 | Black |
| **EM32** | 32 | 53.0 | 156 | 59 | 18 | 205 | 130 | 31.0 | 100.0 | M 42 × 4.5 | Brown |
| **EM40** | 40 | 63.5 | 163 | 65 | 20 | 223 | 150 | 40.0 | 120 | M 48 × 5.0 | Green |

* MODIX® EM is not covered by the European Technical Assessment (ETA) and it is not included in the CE marking system. MODIX® EM production process and material follow same quality requirements as required by ETA.

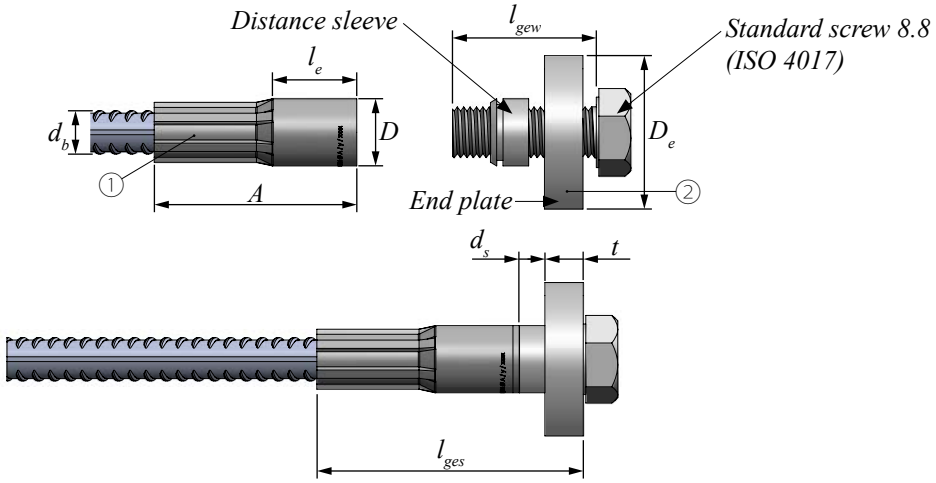

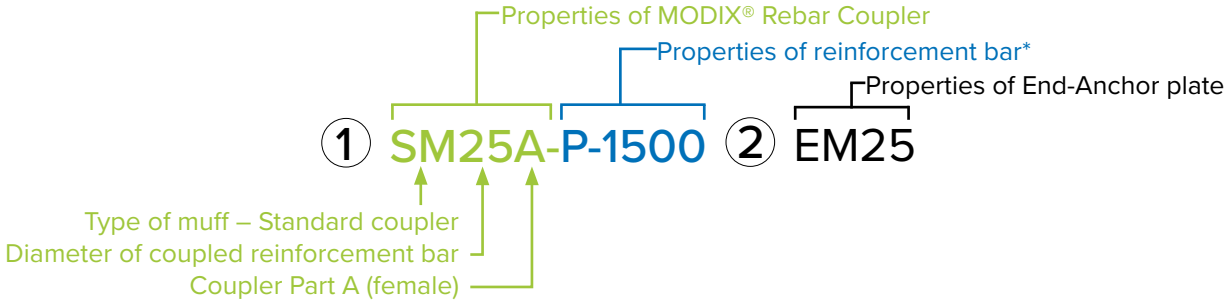


* Detailed explanations of the properties of reinforcement bars are described in Annex A.

## Design of end-anchor

The end-anchor plates are designed with sufficient dimensions to transfer the full strength of the respective bar. The center line and edge spacing result from the proof of the partial area pressure. The structural engineer or architect should check for potential failure types in concrete structure and design supplementary reinforcement according to relevant standards. For example, transverse reinforcement could be designed following the idea presented in EN 1992-1-1 chapter 9.8.4., and possible tension reinforcement could be designed according to EN 1992-4.

## Application

MODIX® EM End-Anchor Couplers are used to reduce the anchorage length of the rebar.

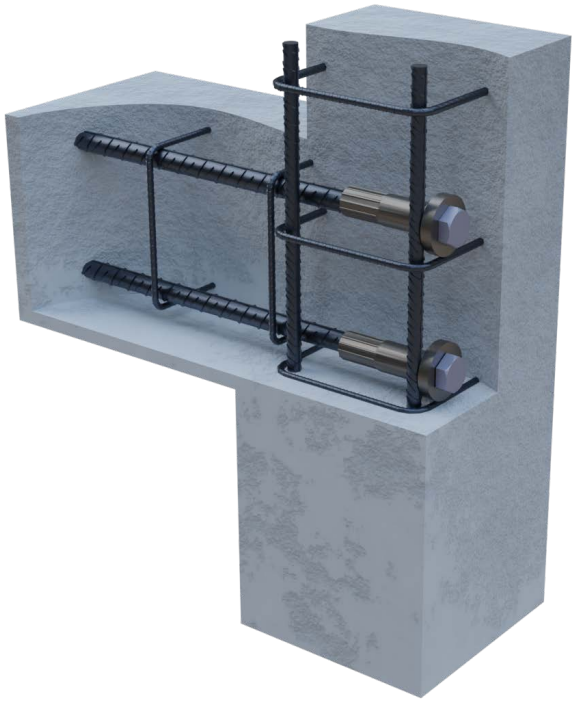

## MODIX® AM (Weld-to Coupler)

- For connection between reinforcement bars and steel plates or sections.
- Axial movement and rotation of SM B muff required.



| Coupler type | Bar Ø $d_b$ [mm] | Coupler Ø $D$ [mm] | Length Part $B$ [mm] | Thread length Part $B$ $l_{gb}$ [mm] | Length of weld-to-sleeve $l_a$ [1)] [mm] | Part $B$ + Sleeve fully assembled $l_{ges}$ [mm] | *ISO* Metric thread M | Color of thread protector |
|---|---|---|---|---|---|---|---|---|
| AM10 | 10 | 17.5 | 46 | 16.0 | 52 | 98 | M 12 × 1.75 | Orange |
| AM12 | 12 | 21.0 | 52 | 21.2 | 63 | 115 | M 16 × 2 | Yellow |
| AM14 | 14 | 24.0 | 57 | 24.8 | 72 | 129 | M 18 × 2.5 | Blue |
| AM16 | 16 | 27.0 | 63 | 27.5 | 80 | 143 | M 20 × 2.5 | White |
| AM18 | 18 | 29 | 71 | 28.6 | 90.0 | 161 | M22 × 2.50 | Light pink |
| AM20 | 20 | 33.0 | 77 | 31.6 | 98.0 | 175 | M24 × 3.00 | Gray |
| AM22 | 22 | 36 | 88 | 35.3 | 110.0 | 198 | M27 × 3.00 | Pastel green |
| AM25 | 25 | 41.0 | 98 | 39.0 | 122.0 | 220 | M30 × 3.00 | Red |
| AM26 | 26 | 44 | 101 | 42.0 | 130.0 | 231 | M33 × 3.50 | Pearl gold |
| AM28 | 28 | 47.0 | 111 | 46.0 | 141.0 | 250 | M36 × 4.00 | Black |
| AM30 | 30 | 50 | 115 | 48.0 | 145.0 | 260 | M39 × 4.00 | Turquoise blue |
| AM32 | 32 | 53.0 | 124 | 53.5 | 156.0 | 280 | M42 × 4.50 | Brown |
| AM34 | 34 | 57 | 135 | 54.7 | 160.0 | 295 | M45 × 4.50 | Anthracite gray |
| AM40 | 40 | 63.5 | 136 | 61.7 | 165 | 300 | M 48 × 5.0 | Green |

[1)] Weld-to sleeves can be shortened on-site to the thread length $la = l_{gb} + 20\ mm$

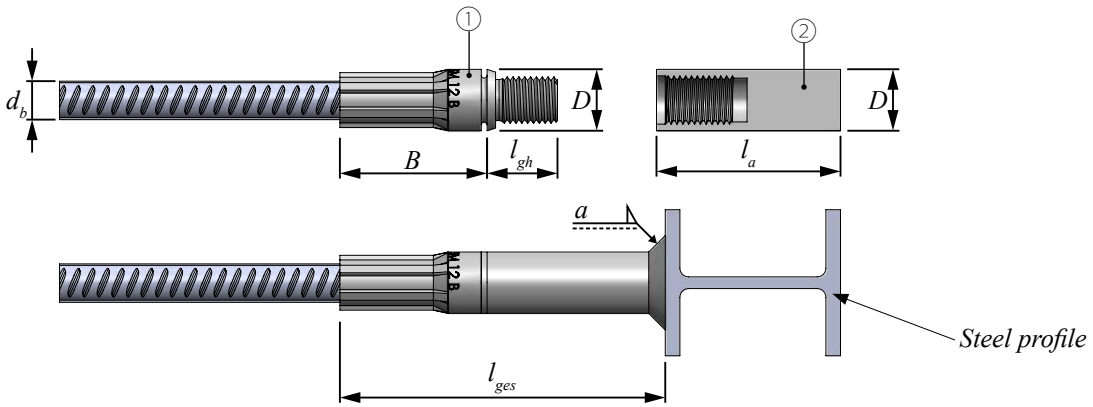


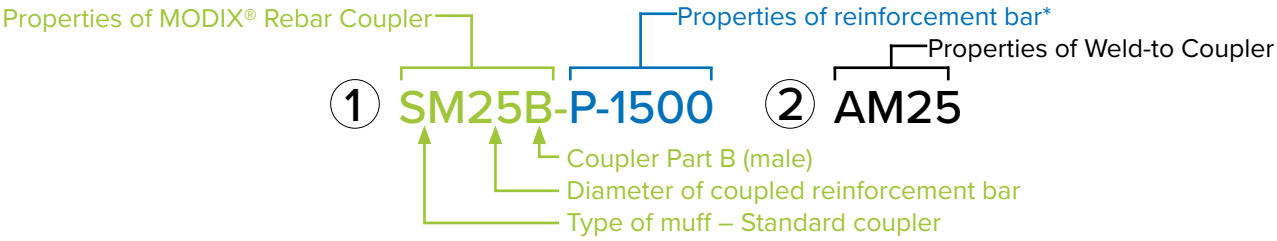


* Detailed explanations of the properties of reinforcement bars are described in Annex A.

### Note:

The MODIX® AM couplers are welded to structural steel following the welding instruction on page 38. The required technical specification, electrode and other important properties are available there. The corrosion protection depends from the environmental and chemical conditions and must be applied to the MODIX® connection on-site.

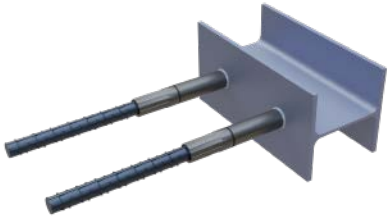

## 2. Resistances

MODIX® Rebar Couplers are designed to correspond to the resistance of hot-rolled ribbed reinforcement bars with characteristic yield strength of $f_{yk}$ = 450 – 500 MPa (for example B450B, B500B according EN 10080).

The performance of MODIX® Rebar Couplers has been assessed by testing.
Essential characteristics for the following types of MODIX® – SM, RM, PM, and AM, according EAD 160129-00-0301 are listed below:

*Table 1. Essential characteristics for standard MODIX® types SMA + SMB.*

- For connecting bars of the same diameter.
- At least one bar can be moved axially and rotated.



| Coupler type combinations | Resistance under static and quasi-static load $f_{u,min,bar,outside}$ $f_{u,min,bar,inside}$ [N/mm²] | | Elongation at failure $A_{gt,act}$ | Slip under load $s_1$ | Slip after unloading $s_2$ | Fatigue strength for S-N curve with specific $k_1$ and $k_2$ | | | Resistance to low-cycle loading (seismic actions) | | |
|---|---|---|---|---|---|---|---|---|---|---|---|
| | B500B | B500C | [%] | [mm] | [mm] | $\Delta\sigma_{Rsk}$ [N/mm²] | $k_1$ [ - ] | $k_2$ [ - ] | $u_{20}$ [mm] | $F_{u,min}$ [kN] B500B | $F_{u,min}$ [kN] B500C |
| **SMA10 + SMB10** | 540 | 575 | 3 | 0.10 | 0.10 | | | | | 42.4 | 45.1 |
| **SMA12 + SMB12** | 540 | 575 | 3 | 0.11 | 0.10 | | | | | 61.1 | 65.1 |
| **SMA14 + SMB14** | 540 | 575 | 3 | 0.11 | 0.10 | | | | | 83.1 | 88.5 |
| **SMA16 + SMB16** | 540 | 575 | 3 | 0.12 | 0.10 | | | | | 108.6 | 115.6 |
| **SMA18 + SMB18** | 540 | 575 | 3 | 0.13 | 0.10 | 85 ($N=2\times10^6$) | | | 0.3 | 137.4 | 146.3 |
| **SMA20 + SMB20** | 540 | 575 | 3 | 0.14 | 0.10 | 57 ($N=2\times10^7$) | 4 | 5 | | 169.6 | 180.6 |
| **SMA22 + SMB22** | 540 | 575 | 3 | 0.15 | 0.10 | | | | | 205.3 | 218.6 |
| **SMA25 + SMB25** | 540 | 575 | 3 | 0.16 | 0.10 | | | | | 265.1 | 282.3 |
| **SMA26 + SMB26** | 540 | 575 | 3 | 0.17 | 0.10 | | | | - | | |
| **SMA28 + SMB28** | 540 | 575 | 3 | 0.18 | 0.10 | | | | - | | |
| **SMA30 + SMB30** | 540 | 575 | 3 | 0.18 | 0.10 | | | | - | | |
| **SMA32 + SMB32** | 540 | 575 | 3 | 0.19 | 0.10 | 75 ($N=2\times10^6$) | | | - | | |
| **SMA34 + SMB34** | 540 | 575 | 3 | 0.20 | 0.10 | 50 ($N=2\times10^7$) | 4 | 5 | - | | |
| **SMA40 + SMB40** | 540 | 575 | 3 | 0.20 | 0.10 | | | | - | | |

*Table 2. Essential characteristics for reduction MODIX® types with different rebar diameter SMA + SMB; SMB + SMA.*

- For connecting bars with different diameters.
- At least one bar can be moved axially and rotated.



| Coupler type combinations | Resistance under static and quasi-static load $f_{u,min,bar,outside}$ $f_{u,min,bar,inside}$ [N/mm²] | | Elongation at failure $A_{gt,act}$ | Slip under load $s_1$ | Fatigue strength for S-N curve with specific $k_1$ and $k_2$ | | | Resistance to low-cycle loading (seismic actions) | | |
|---|---|---|---|---|---|---|---|---|---|---|
| | B500B | B500C | [%] | [mm] | $\Delta\sigma_{Rsk}$ [N/mm²] | $k_1$ [ - ] | $k_2$ [ - ] | $u_{20}$ [mm] | $F_{u,min}$ [kN] B500B | $F_{u,min}$ [kN] B500C |
| **SMA12 + RMB12/10 or SMB12 + RMA12/10** | 540 | 575 | 3 | 0.10 | 85 ($N=2 \times 10^6$) 57 ($N=2 \times 10^7$) | 4 | 5 | 0.3 | 42.4 | 45.1 |
| **SMA14 + RMB14/12 or SMB14 + RMA14/12** | 540 | 575 | 3 | 0.11 | | | | | 61.1 | 65.1 |
| **SMA16 + RMB16/14 or SMB16 + RMA16/14** | 540 | 575 | 3 | 0.11 | | | | | 83.1 | 88.5 |
| **SMA18 + RMB18/16 or SMB18 + RMA18/16** | 540 | 575 | 3 | 0.12 | | | | | 108.6 | 115.6 |
| **SMA20 + RMB20/16 or SMB20 + RMA20/16** | 540 | 575 | 3 | 0.13 | | | | | 108.6 | 115.6 |
| **SMA22 + RMB22/18 or SMB22 + RMA22/18** | 540 | 575 | 3 | 0.14 | | | | | 137.4 | 146.3 |
| **SMA25 + RMB25/20 or SMB25 + RMA25/20** | 540 | 575 | 3 | 0.15 | | | | | 169.6 | 180.6 |
| **SMA26 + RMB26/22 or SMB26 + RMA26/22** | 540 | 575 | 3 | 0.16 | | | | | - | |
| **SMA28 + RMB28/25 or SMB28 + RMA28/25** | 540 | 575 | 3 | 0.17 | | | | | - | |
| **SMA30 + RMB30/26 or SMB30 + RMA30/26** | 540 | 575 | 3 | 0.18 | | | | | - | |
| **SMA32 + RMB32/28 or SMB32 + RMA32/28** | 540 | 575 | 3 | 0.18 | 75 ($N=2 \times 10^6$) 50 ($N=2 \times 10^7$) | 4 | 5 | | - | |
| **SMA34 + RMB34/30 or SMB34 + RMA34/30** | 540 | 575 | 3 | 0.19 | | | | | - | |
| **SMA40 + RMB40/32 or SMB40 + RMA40/32** | 540 | 575 | 3 | 0.20 | | | | | - | |
| **SMA40 + RMB40/34 or SMB40 + RMA40/34** | 540 | 575 | 3 | 0.20 | | | | | - | |

*Table 3. Essential characteristics for MODIX® position types SMA + PM + SMB.*

- For connecting straight or bent bars.
- None of the bars can move axially or rotate.



| Coupler type combinations | Resistance under static and quasi-static load $f_{u,min,bar,outside}$ $f_{u,min,bar,inside}$ [N/mm²] | | Elongation at failure $A_{gt,act}$ | Slip under load $s_1$ | Fatigue strength for S-N curve with specific $k_1$ and $k_2$ | | |
|---|---|---|---|---|---|---|---|
| | B500B | B500C | [%] | [mm] | $\Delta\sigma_{Rsk}$ [N/mm²] | $k_1$ [ - ] | $k_2$ [ - ] |
| SMA10 + PM10 + SMB10 | 540 | 575 | 3 | 0.14 | 85 ($N=2 \times 10^6$) 57 ($N=2 \times 10^7$) | 4 | 5 |
| SMA12 + PM12 + SMB12 | 540 | 575 | 3 | 0.16 | | | |
| SMA14 + PM14 + SMB14 | 540 | 575 | 3 | 0.17 | | | |
| SMA16 + PM16 + SMB16 | 540 | 575 | 3 | 0.18 | | | |
| SMA18 + PM18 + SMB18 | 540 | 575 | 3 | 0.19 | | | |
| SMA20 + PM20 + SMB20 | 540 | 575 | 3 | 0.20 | | | |
| SMA22 + PM22 + SMB22 | 540 | 575 | 3 | 0.20 | | | |
| SMA25 + PM25 + SMB25 | 540 | 575 | 3 | 0.20 | | | |
| SMA26 + PM26 + SMB26 | 540 | 575 | 3 | 0.20 | | | |
| SMA28 + PM28 + SMB28 | 540 | 575 | 3 | 0.20 | | | |
| SMA30 + PM30 + SMB30 | 540 | 575 | 3 | 0.20 | 75 ($N=2 \times 10^6$) 50 ($N=2 \times 10^7$) | 4 | 5 |
| SMA32 + PM32 + SMB32 | 540 | 575 | 3 | 0.20 | | | |
| SMA34 + PM34 + SMB34 | 540 | 575 | 3 | 0.20 | | | |
| SMA40 + PM40 + SMB40 | 540 | 575 | 3 | 0.20 | | | |

*Table 4. Essential characteristics for MODIX® welding types of AM + SMB.*

- For connection between reinforcement bars and steel plates or sections.
- Axial movement and rotation of SM B muff required.



| Coupler type combinations | Resistance under static and quasi-static load $f_{u,min,bar,outside}$ $f_{u,min,bar,inside}$ [N/mm²] | | Elongation at failure $A_{gt,act}$ | Slip under load $s_1$ |
|---|---|---|---|---|
| | B500B | B500C | [%] | [mm] |
| **AM10 + SMB10** | 540 | 575 | 3 | 0.10 |
| **AM12 + SMB12** | 540 | 575 | 3 | 0.10 |
| **AM14 + SMB14** | 540 | 575 | 3 | 0.10 |
| **AM16 + SMB16** | 540 | 575 | 3 | 0.10 |
| **AM18 + SMB18** | 540 | 575 | 3 | 0.10 |
| **AM20 + SMB20** | 540 | 575 | 3 | 0.10 |
| **AM22 + SMB22** | 540 | 575 | 3 | 0.10 |
| **AM25 + SMB25** | 540 | 575 | 3 | 0.10 |
| **AM26 + SMB26** | 540 | 575 | 3 | 0.10 |
| **AM28 + SMB28** | 540 | 575 | 3 | 0.16 |
| **AM30 + SMB30** | 540 | 575 | 3 | 0.16 |
| **AM32 + SMB32** | 540 | 575 | 3 | 0.16 |
| **AM34 + SMB34** | 540 | 575 | 3 | 0.17 |
| **AM40 + SMB40** | 540 | 575 | 3 | 0.17 |

## 2.1 Fire resistance

The concrete cover of the rebar couplers must be at least equivalent to the concrete cover of the reinforcement of the concrete element. If the fire resistance of the rebar coupler connection is judged to be insufficient, the concrete cover of the rebar coupler must be increased.

# Annex A – Shape of reinforcement bars

Reinforcement bars connected with MODIX® may be processed to the forms specified in *Table 3*. The geometry of the reinforcement bar must be specified in the product code or product shape list (*Table 2*) following the instructions below.

## General product code principles:

### Single-sided:

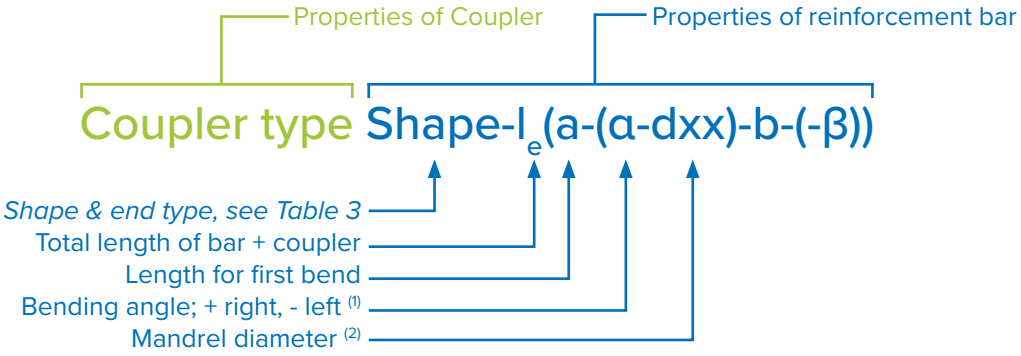


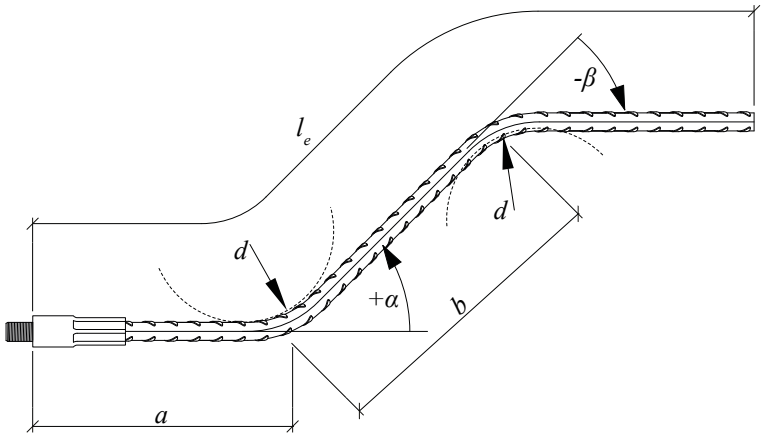


Example: SM25B-P26-1200(400-(45)-500-(-45))

(1) The bending angle must be defined in shapes 15, 25, 26 according to *Table 3*. Shapes 12, 13, 21 have standard bending angle ⇨ 12, 21 = 90°; 13 = 180°.

(2) The mandrel diameter Ø m must be defined only if the value differs from the minimum requirements of EN 1992-1-1 8.3.

## Double-sided:

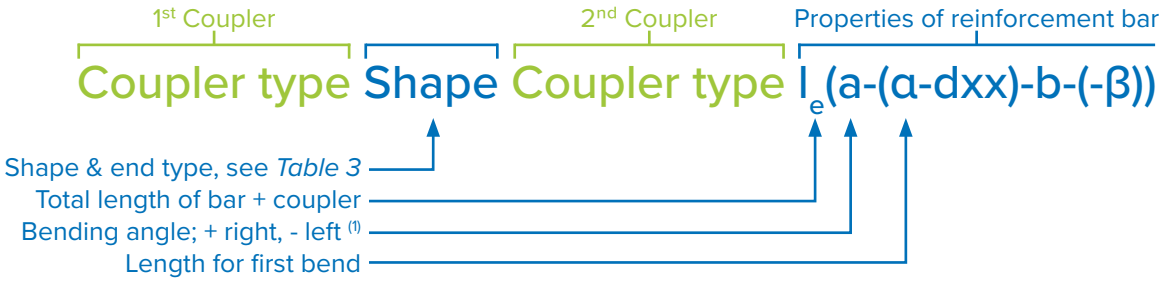


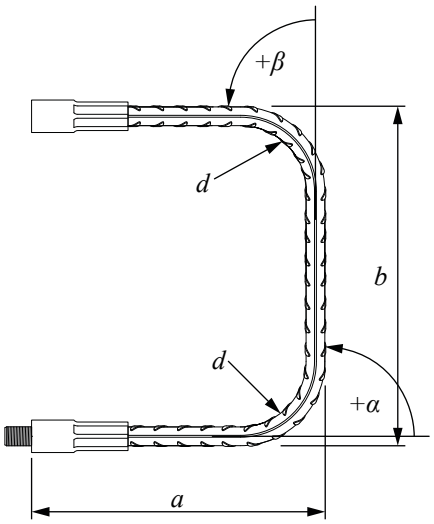


Example: SM20A-D21-SM20B-1100(400-300)

(1) The bending angle must be defined in shapes 15, 25, 26 according to *Table 3*. Shapes 12, 13, 21 have standard bending angle ⇨ 12, 21 = 90°; 13 = 180°.

*Table 5. MODIX® Rebar Coupler list examples.*

| # | Pos. | MODIX® | | Bending shape + end type | Reinforcement bar | | | Dimensions | | | | | Notes (A) |
|---|---|---|---|---|---|---|---|---|---|---|---|---|---|
| | | 1st end | 2nd end | | Ø [mm] | Material | Standard | $l_e$ [mm] | $a$ [mm] | $b$ [mm] | $\alpha$ [mm] | $\beta$ [mm] | |
| 1(B) | 38 | SM25A | | P26 | 25 | B500B | EN 10080 | 1200 | 400 | 500 | 45 | -45 | d200 |
| 2(B) | 5 | SM20A | RM16A | D21 | 20 | B500B | EN 10080 | 1100 | 400 | 300 | 90 | 90 | |
| 3(B) | 30 | SM16A | | E | 16 | B500B | EN 10080 | 800 | | | | | 10 × 50 × 50 |

(A) Additional information can be specified. For example, if the required mandrel diameter Ø m differs from the standard values specified in *Table 5* or custom dimensions of anchor plates are in group E.

(B) Dimension C is not necessary. It can be calculated from the total length ($l_e$) minus dimensions $a$ and $b$.

*Table 6. MODIX® rebar Product shape list.*

| P – Straight end | D – Double end | E – End plate | L – Headed stud |
|---|---|---|---|
| P 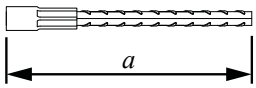  | D 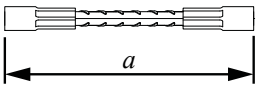  | E 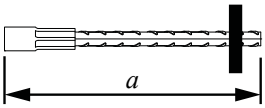  | L 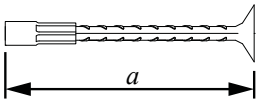  |
| Total length calculation: $l_e = a$<br>Example of product code: SM25A-E-1200 | | | |
| P12 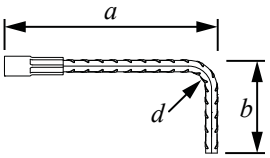  | D12 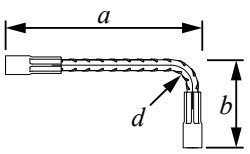  | E12 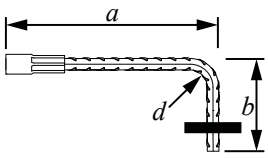  | L12 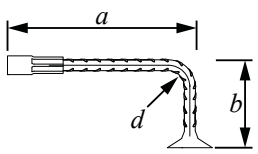  |
| Total length calculation: $l_e = a + b - ¼d - d_b$<br>Example of product code: SM25A-P12-1200(500) | | | |
| P13 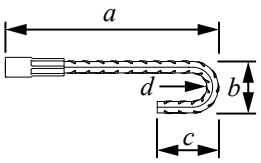  | D13 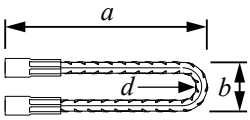  | | |
| Total length calculation: $l_e = a + 0{,}57b + c - 1{,}57d_b$ or $l_e = 2a + 0{,}57b - 1{,}57d_b$<br>Example of product code: SM25A-D13-SM25A-1200(500-300) | | | |
| P15 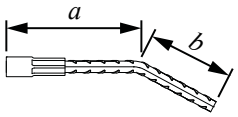  | D15 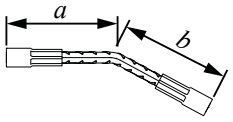  | E15 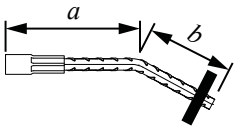  | L15 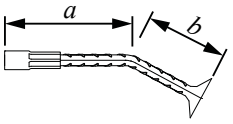  |
| Total length calculation: $l_e = a + b$<br>Example of product code: SM25A-E15-1000(500-(-30)) | | | |
| P21 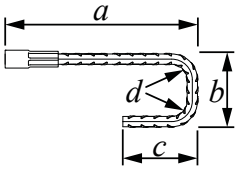  | D21 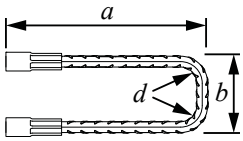  | | |
| Total length calculation: $l_e = a + b + c - ½d - 2d_b$<br>Example of product code: SM25A-P21-1500(700-600) | | | |
| P25 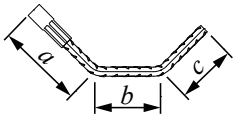  | D25 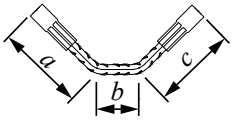  | E25 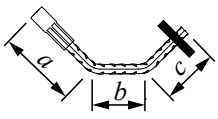  | L25 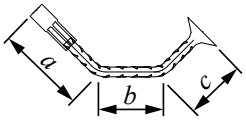  |
| Total length calculation: $l_e = a + b + c$<br>Example of product code: SM25A-L25-1500(700-(45)-600-(45)) | | | |
| P26 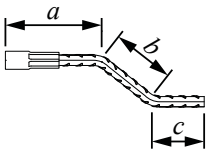  | D26 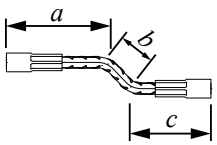  | E26 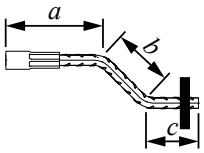  | L26 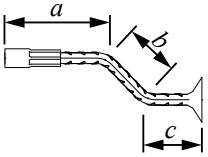  |
| Total length calculation: $l_e = a + b + c$<br>Example of product code: SM25A-L26-1500(700-(-45)-600-(45)) | | | |

## ANNEX A

## NOTES:

1. The letter in the code describes the MODIX® rebar end type (P, D, E, L) and the numbers describe the rebar bending shape according to EN ISO 3766.
2. The product code of MODIX® rebar with no bending does not contain a bending shape.
3. The standard end plate (default) dimensions are shown in *Table 4*. Customized end plates can be produced if all necessary dimensions are provided on the order form. However, for customized end plates, Fastcon does not take responsibility for the end plate design.

*Table 7. Standard dimensions for anchor plates (E product shape) and anchor heads (L product shape).*

*End plate – Product shape E*

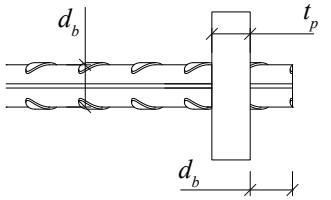


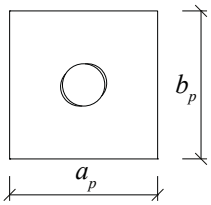


*Anchor head – Product shape L*

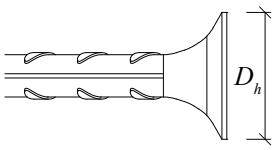


| Bar Ø | $d_b$ [mm] | 10 | 12 | 14 | 16 | 20 | 25 | 28 | 32 | 40 |
|---|---|---|---|---|---|---|---|---|---|---|
| **Product shape E (End plate)** | | | | | | | | | | |
| Thickness of end plate | $t_p$ [mm] | 10 | 12 | 15 | 20 | 20 | 25 | 30 | 35 | 40 |
| Length of end plate | $a_p$ [mm] | 40 | 45 | 50 | 55 | 70 | 90 | 100 | 115 | 140 |
| Width of end plate | $b_p$ [mm] | 40 | 45 | 50 | 55 | 70 | 90 | 100 | 115 | 140 |
| **Product shape L (Anchor head)** | | | | | | | | | | |
| Min. diameter of anchor head according to ETA 21/0373 | $D_h$ [mm] | 30 | 36 | 42 | 48 | 60 | 75 | 84 | 96 | - |

*Table 8. Minimum dimensions of bent reinforcement bar in mm.*

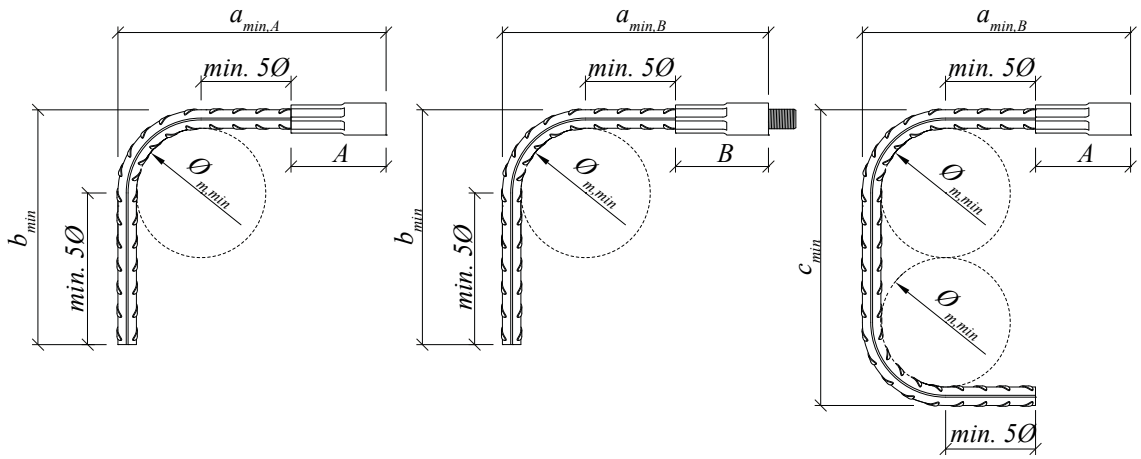


| Bar Ø | 10 | 12 | 14 | 16 | 20 | 25 | 28 | 32 | 40 |
|---|---|---|---|---|---|---|---|---|---|
| $Ø_{m,min}$ | 4Ø<br>40 mm | 4Ø<br>48 mm | 4Ø<br>56 mm | 4Ø<br>64 mm | 7Ø<br>140 mm | 7Ø<br>175 mm | 7Ø<br>196 mm | 7Ø<br>224 mm | 7Ø<br>280 mm |
| $A$ | 52 | 63 | 72 | 80 | 98 | 122 | 141 | 156 | 163 |
| $B$ | 46 | 52 | 57 | 63 | 77 | 98 | 111 | 124 | 136 |
| $a_{min,A}$ | 132 | 159 | 184 | 208 | 288 | 360 | 407 | 460 | 543 |
| $a_{min,B}$ | 126 | 148 | 169 | 191 | 267 | 336 | 377 | 428 | 516 |
| $b_{min}$ | 80 | 96 | 112 | 128 | 190 | 238 | 266 | 304 | 380 |
| $c_{min}$ | 120 | 124 | 168 | 172 | 320 | 350 | 400 | 450 | 500 |

Minimum mandrel diameters $Ø_{m,m}in$ are according to EN 1992-1-1 chapter 8.3

Values presented in the *Table 8* are valid only with minimum mandrel diameter $Ø_{m,min}$. Please consider effect on $a$, $b$, and $c_{min}$ when using larger mandrel diameters.

If smaller *amin* is needed, please contact Fastcon technical support.

# Annex B – ARBOX® Joint Reinforcement with MODIX® Rebar coupler

It is possible to use ARBOX® together with MODIX® Rebar coupler and take benefits from both systems.

- No reduction of connection resistances due to re-bending of rebar.
- Possible many rebar shape options including anchor head (see Annex A).
- MODIX® coupler with ARBOX® has a shear resistance.
- Possible rebar diameter up to 20 mm.

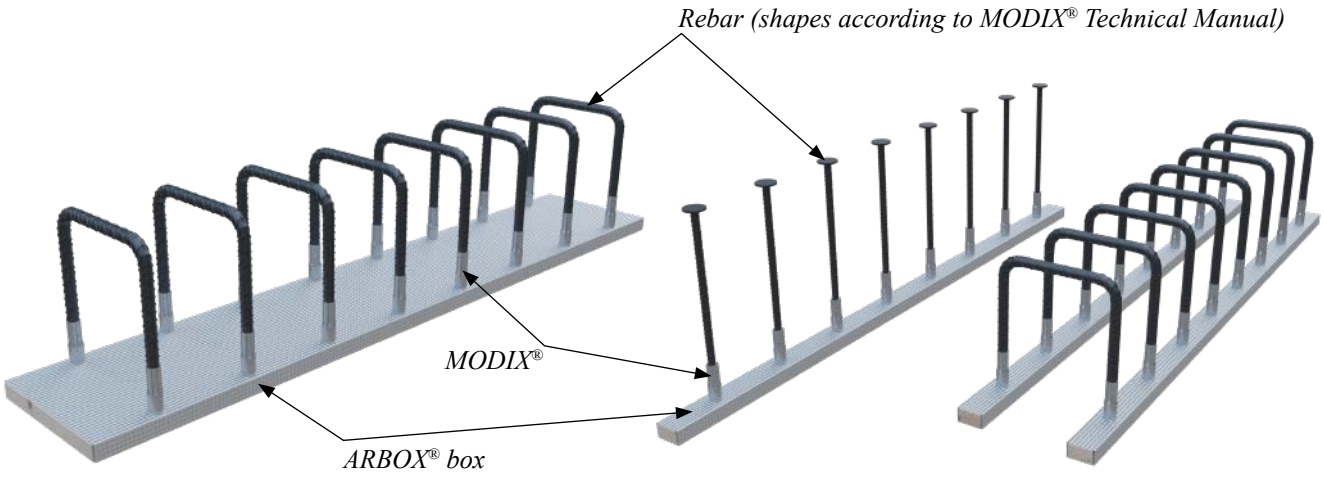


## How to order ARBOX® Joint Reinforcement with MODIX® Rebar coupler

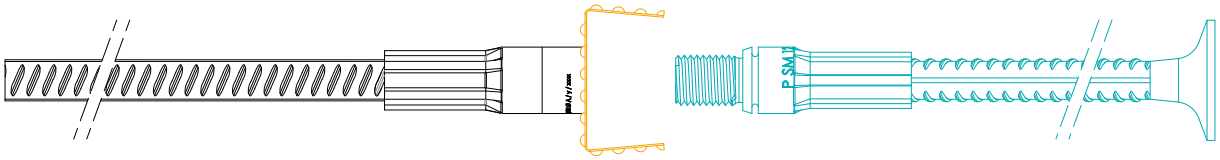

*MODIX® female* *ARBOX® Plus* *MODIX® male*

**BOX part**
**Assembly part**

*Description of MODIX® female part attached to ARBOX® Plus (see MODIX® Technical Manual)*

*ARBOX® Plus dimensions*

**Rebar part**
**Separate item**

*Description of MODIX® male part (see MODIX® Technical Manual)*

SM16A-P-500 + ARBOX® Plus-150-205 + SM16B-L-300

Rebar spacing
Box width

- Respect box dimensions from *Table 1*, *Table 2* and *Table 3* of ARBOX® Technical manual.
- Shape of rebars can be produced based on *Table 3* of MODIX® Technical manual.
- Respect minimum dimension of bended reinforcement bars from *Table 5* of MODIX® Technical manual.

Shear resistances of ARBOX® with MODIX® models can be calculated with full capacity of rebar which is 500 MPa.

# Annex C – Welding seam information – MODIX® AM

*Table 9. Parameters for the welding connection with MODIX® AM.*

| Muff Type | Ø [mm] | min. $t$ [mm] | Fillet weld | | Butt weld Basis material | | | | Combined weld Basis material | | | |
|---|---|---|---|---|---|---|---|---|---|---|---|---|
| | | | S235 | | S235 | | S355 | | S235 | | S355 | |
| | | | $a$ [mm] optimized | $a$ [mm] (0.4×ds) | $s_1$ [mm] | $a_1$ [mm] | $s_1$ [mm] | $a_1$ [mm] | $s_2$ [mm] | $a_2$ [mm] | $s_2$ [mm] | $a_2$ [mm] |
| **AM10** | 10 | 4 | 2.5 | 4 | 5.0 | 3.5 | 4.0 | 3.0 | 5.0 | 2.5 | 4.0 | 2.0 |
| **AM12** | 12 | 5 | 3.0 | 5 | 6.0 | 4.5 | 4.5 | 3.5 | 6.0 | 3.0 | 5.0 | 2.5 |
| **AM14** | 14 | 6 | 3.5 | 6 | 7.0 | 5.0 | 5.5 | 4.0 | 7.0 | 3.5 | 6.0 | 3.0 |
| **AM16** | 16 | 7 | 4.5 | 7 | 8.5 | 6.0 | 6.5 | 4.5 | 8.5 | 4.5 | 7.0 | 3.5 |
| **AM18** | 18 | 7 | 5.0 | 7 | 11.0 | 8.0 | 7.5 | 5.5 | 10.0 | 5.0 | 8.0 | 4.0 |
| **AM20** | 20 | 8 | 5.5 | 8 | 11.0 | 8.0 | 8.0 | 6.0 | 10.5 | 5.5 | 9.0 | 4.5 |
| **AM22** | 22 | 9 | 6.0 | 9 | 13.0 | 9.0 | 9.0 | 6.5 | 11.5 | 6.0 | 10.0 | 5.0 |
| **AM25** | 25 | 10 | 6.5 | 10 | 14.0 | 10.0 | 10.0 | 7.5 | 13.0 | 6.5 | 11.0 | 5.5 |
| **AM26** | 26 | 11 | 7.0 | 11 | 14.0 | 10.0 | 10.0 | 7.5 | 13.5 | 7.0 | 11.0 | 5.5 |
| **AM28** | 28 | 12 | 7.5 | 12 | 15.0 | 10.5 | 11.0 | 8.0 | 14.5 | 7.5 | 12.0 | 6.0 |
| **AM30** | 30 | 12 | 8.0 | 12 | 16.0 | 11.5 | 12.0 | 8.5 | 15.5 | 8.0 | 13.0 | 6.5 |
| **AM32** | 32 | 13 | 8.5 | 13 | 17.5 | 12.5 | 12.5 | 9.0 | 16.5 | 8.5 | 14.0 | 7.0 |
| **AM34** | 34 | 14 | 9.0 | 14 | 18.0 | 13.0 | 13.0 | 9.5 | 17.5 | 9.0 | 15.0 | 7.5 |
| **AM40** | 40 | 16 | 11.0 | 16 | 25.0 | 18.0 | 17.0 | 12.5 | 21.5 | 11.0 | 18.0 | 9.0 |

-$Ø$ = rebar diameter to weld
$a$ = optimized to the circumferential length of the muff
$s_1$ = nominal butt weld size, objectives must comply with EN ISO 9692-1:2013-12
$t$ = 0.4×$Ø$, minimum thickness of steel structure according EN ISO 17660-1:2006

| min. $b_1$ | min. $b_2$ | min. $b_3$ | min. $b_4$ | min. $b_5$ | min. $b_6$ |
|---|---|---|---|---|---|
| $a \times 1.41$ | $2 \times a$ / EN 1992 | 0 | 20 mm / EN 1992 | $a_2$ | $s_2$ / EN 1992 |
| 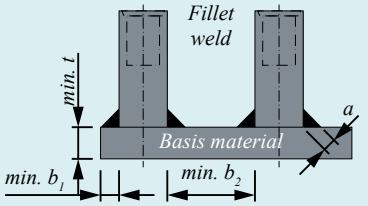  | | 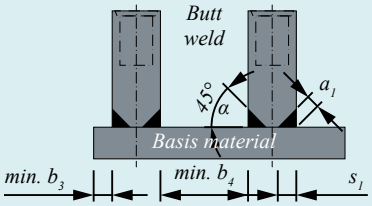  | | 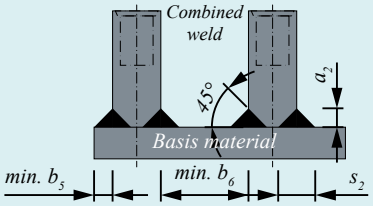  | |
| Standard weld, no preparation needed | | Butt + Combined weld are special cases, welding seam preparation to be applied | | | |

min. $b_2$, min. $b_4$, min. $b_6$ = consider EN 1992 + NA chapter 8.2, to check maximum of {$k_1 \times Ø$; $k_2 + dg$; 20 mm}

The following criteria are set prior to execution and must be fulfilled during the welding process at any time.

**Company:**
- welding certificate acc EN 1090 with related scope for welding
- welding process must be defined by responsible welding expert (recommendation by Fastcon: process 111, 135)
- qualified welding process with welding instruction

**Basis material:**
- weldable material considering the structural design of the connection

**Welder:**
- valid test certificate according to ISO9606-1 within related scope for welding

**Welding filler material:**
- follows the qualified welding process and the welding instruction
- Process 111: low-hydrogen-electrode with basic covering according to EN ISO2560-A
- Process 135: massive wire electrode according to EN ISO 14341.

Welding seam preparation (chamfering) for Butt or Combined welds is not a part of standard delivery. If welding seam preparation is requested to be completed by Fastcon, type of welding seam preparation (Butt or Combined) must be defined in request.

# Installation of MODIX® Rebar Coupler

## Identification of the product

The type of MODIX® Rebar Coupler can be identified by the markings on the product. The size of the Coupler can be identified also according to the color of the thread protection accessories. The color codes are shown in the table below.

| Bar Ø [mm] | 10 | 12 | 14 | 16 | 18 | 20 | 22 |
|---|---|---|---|---|---|---|---|
| Color of thread protector | Orange | Yellow | Blue | White | Light Pink | Gray | Pastel Green |
| Bar Ø [mm] | 25 | 26 | 28 | 30 | 32 | 34 | 40 |
| Color of thread protector | Red | Pearl gold | Black | Turquoise blue | Brown | Anthracite gray | Green |

Thread protection accessories are installed at the MODIX® production factory and delivered with the couplers.



*SM A* *SM B* *RM A* *PM* *RM B*

### Screw-in protective plug

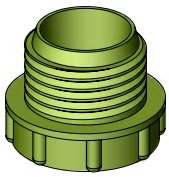

- Is screwed into coupler Part A.
- Protects the thread from water, concrete, dust, and particles during the first pouring.
- Is removed directly before fitting Part B or replaced by a nailing plate before being attached to the mold.

### Slip over protective cap



- Is slipped onto coupler part B.
- Protects the thread from water and dust during storage and transportation.
- Is removed directly before assembling with Part A.

### Storage

To avoid corrosion and damage to MODIX® Rebar Couplers, they should be stored in dry conditions and not directly exposed to water.

### Quality of connection

General procedures to follow before and during the assembly of MODIX® Rebar Couplers:

1. Remove the thread protector from the MODIX® part.
2. Clean the thread properly.
3. Check visually that the thread has no damage.
4. Carefully align the counterparts to avoid damage to the first pitches.
5. Carefully turn on the first pitches.
6. Never use force to connect MODIX® parts – correct use enables a screw connection to be made by hand.
7. To reduce friction, a special lubrication spray or grease can be used.
8. Proper tightening of the MODIX® Rebar Coupler system is achieved when the ring gap on MODIX® Part B and the distance sleeve are closed (see *Figure 2*). This can be achieved using a wrench (a torque wrench is not required). Excessive tightening (e.g. using a hammer) is prohibited. Connections can be checked by visual inspection.

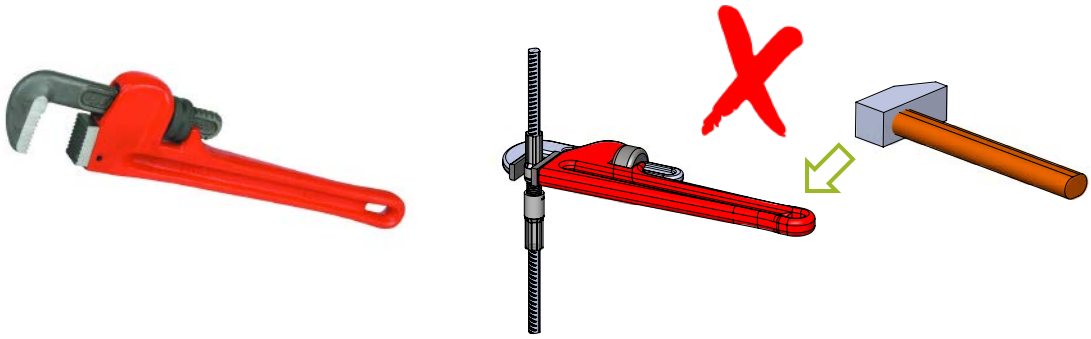

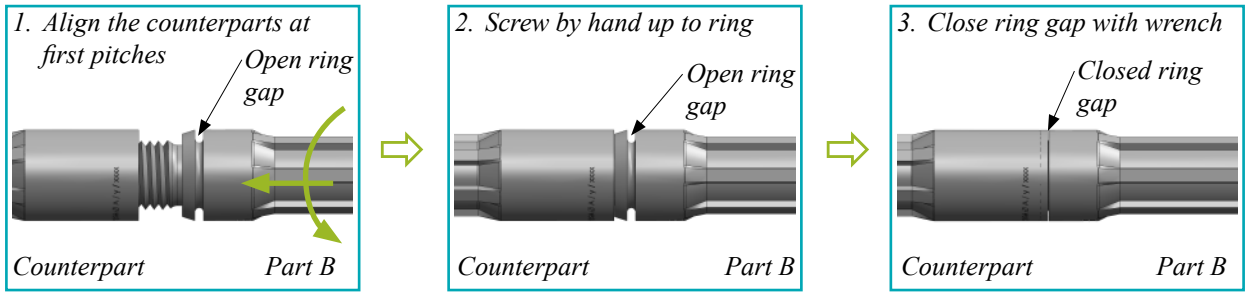


*Figure 2. Correctly connected MODIX® counterpart (e.g. SMA or positioning sleeve) and Part B with closed ring gap.*

- It is prohibited to weld on the SMA and SMB muff closer than 3Ø (three times diameter of reinforcement bar) to the swaging zone; fixation with wire is recommended instead.

*Table 10. Torque moment values required **only without a control ring gap.***

| Bar Ø | $d_b$ | [mm] | 10 | 12 | 14 | 16 | 20 | 25 | 28 | 32 | 40 |
|---|---|---|---|---|---|---|---|---|---|---|---|
| **Torque moment** | Nm | [Nm] | 50 | 50 | 80 | 120 | 180 | 270 | 270 | 300 | 350 |

## MODIX® connected inside of the concrete elements

### MODIX® SM and RM:

1. Coupler Part A ① and coupler Part B ②, including the attached bar, are delivered with thread protectors ③ and ④.

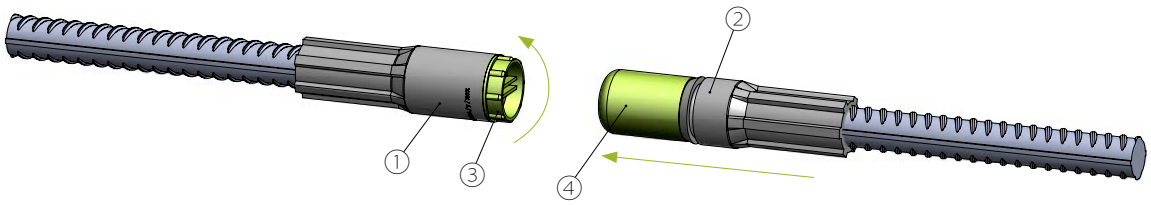


2. Remove plugs from couplers directly before installation. Clean the thread properly. Visually check that the thread is not damaged. Carefully center the counterpart (SMB) to avoid causing damage to the first pitches.

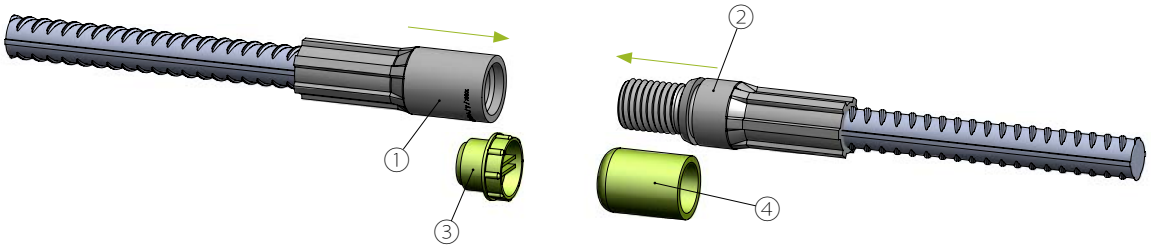


3. Coupler Part B ② is screwed onto coupler Part A ①. Carefully turn Part B ② on the first pitches into Coupler Part A ①. Never use force to connect coupler Part A ① and coupler Part B ②. Correct use enables a screw connection to be made by hand.

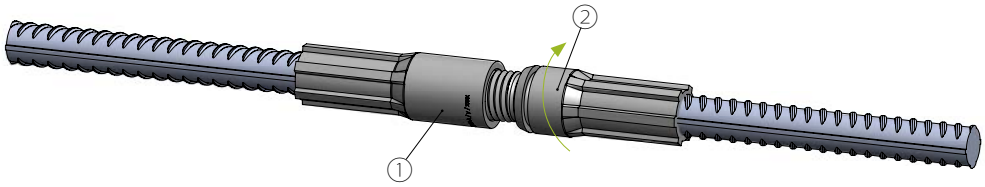


4. It is tightened using a wrench until the ring gap is completely closed.

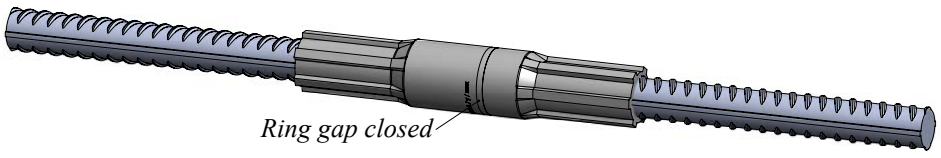

## MODIX® PM:

1. If the MODIX® PM ⑤ and coupler Part B ②, including the attached bar, are delivered pre-assembled to the site, the positioning sleeve ⑥ must be screwed off the coupler Part B ②. Remove the thread protective plug ③ from coupler Part A ① and the thread protective cap ④ from the MODIX® PM ⑤.

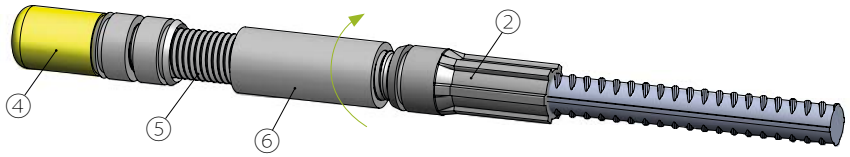


2. Remove the thread protective plug ③ from coupler Part A ① and the thread protective cap ④ from the MODIX® PM ⑤.

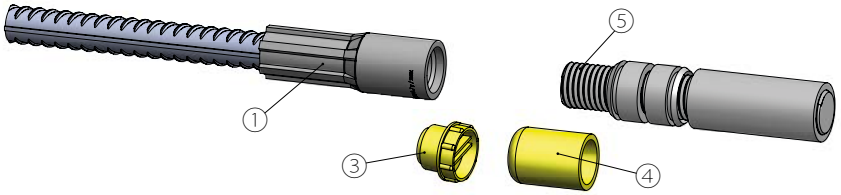


3. Clean all threads properly. Visually check that the thread is not damaged. Hand-tighten the threaded bar so it sits tightly in coupler Part A ①. Tighten counter nut ⑦ of MODIX® PM ⑤ against coupler Part A ① until the ring gap is closed.

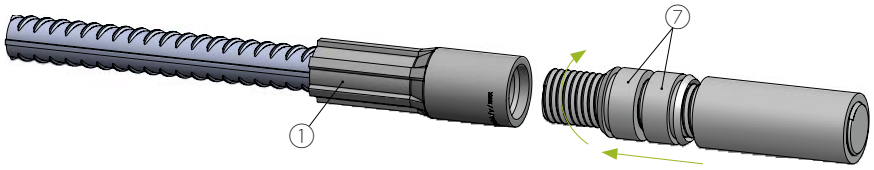


4. Tighten counter nut ⑦ of MODIX® PM ⑤ against coupler Part A ① until the ring gap is closed.

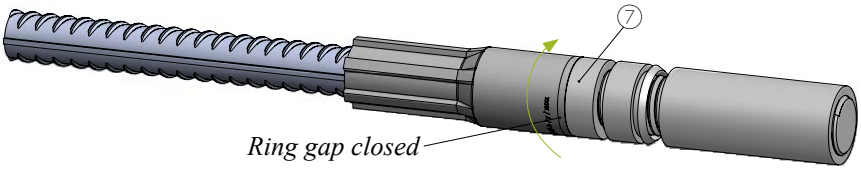

5. Align the thread of coupler Part B ②, including the attached reinforcing bar, with the threaded bar of the MODIX® PM ⑤.

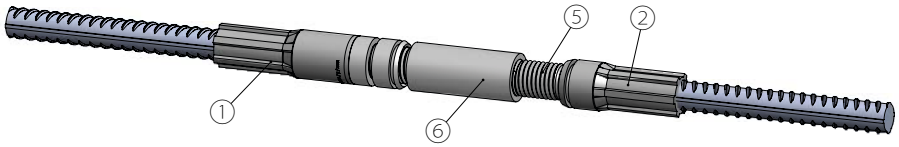


6. Turn the positioning sleeve ⑥ of the MODIX® PM ⑤ over the threaded part of coupler Part B ② until the ring gap is closed.

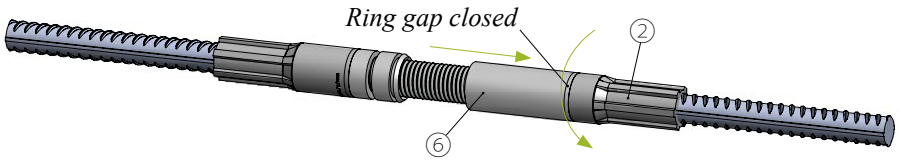


7. The second counter nut ⑦ of the MODIX® PM is then tightened against the positioning sleeve until the ring gap is closed.

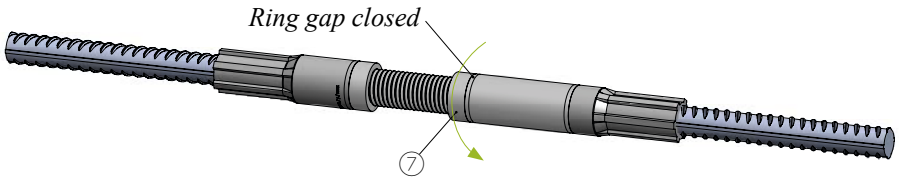

## MODIX® EM:

1. MODIX® EM Part A ①, including the attached bar, are delivered with thread protective plug ③.

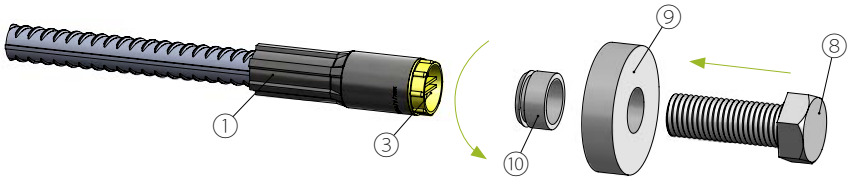


2. Remove the thread protector ③ from the couplers directly before installation. Assemble the M-threaded bolt ⑧ with the distance sleeve ⑩ and anchor plate ⑨.

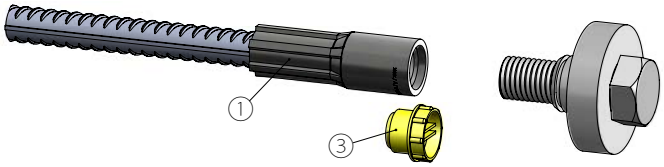


3. The bolt ⑧ with the anchor plate ⑨ is screwed onto coupler Part A ①. It is tightened using a wrench until the ring gap is completely closed.

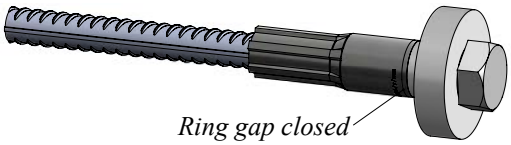


4. If standard M-thread bolt ⑧ is used without a distance sleeve ⑩, the torque moment should be controlled (see *Table 6*).

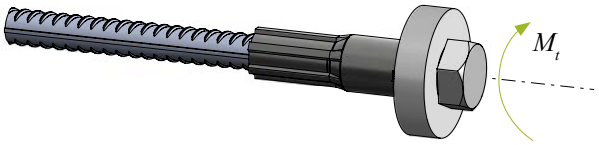

## MODIX® KM:

1. MODIX® KM Part A ①, including the attached bar, is delivered with thread protective plug ③. Remove the thread protector ③ from the couplers directly before installation.

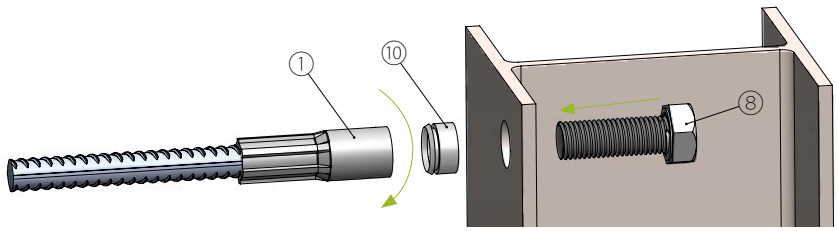


2. Assemble the M-threaded bolt ⑧ with the distance sleeve ⑩ through the hole in the steel profile. Align the thread of coupler Part A ①, including the attached reinforcing bar, with the M threaded bolt ⑧. Assembly can be done in two ways: either by tightening Part A ① or the M threaded bolt ⑧.

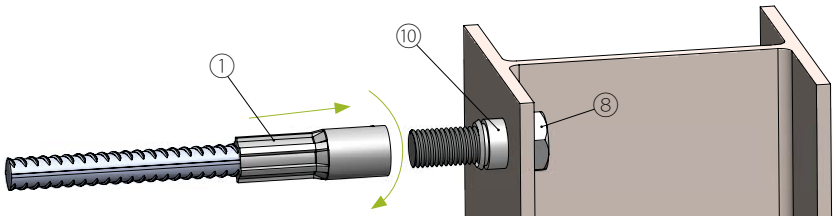


3. The connection is tightened using a wrench until the ring gap at the distance sleeve ⑩ is completely closed.

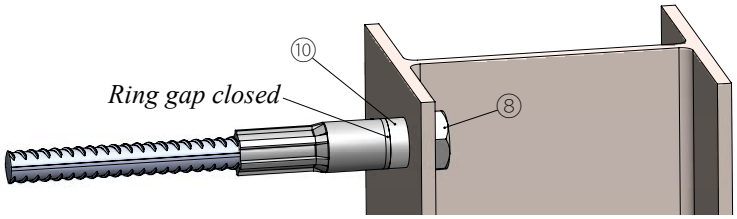


4. If a standard M thread bolt ⑧ is used without a distance sleeve ⑩, the torque moment should be controlled (see Table 6).

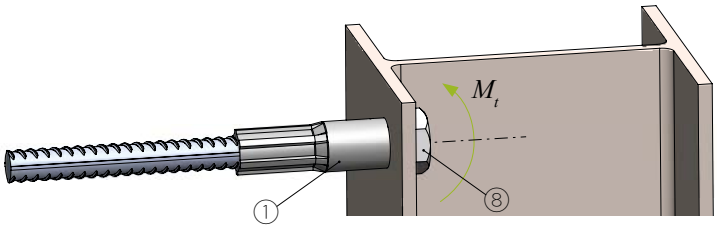

## MODIX® connected on the edge of concrete element

During the casting of concrete elements, it is important to ensure that the rebar is placed and fixed appropriately in the correct position. Depending on the structural solution and construction technology, MODIX® rebar must be fixed to formwork, reinforcement, or supplementary fixation details. Fastcon accessories are available to ensure that the MODIX® rebar is correctly fixed to the formwork.

## MODIX® attached to formwork using fixation plates

Nailing and magnetic plates can be used to fix MODIX® Part A to the mold in the correct position on the construction site or in the precast factory. These accessories are optional and must be ordered in addition to MODIX® couplers. The color codes of nailing plates are shown in the table below.

| **Bar Ø [mm]** | **10** | **12** | **14** | **16** | **18** | **20** | **22** |
|---|---|---|---|---|---|---|---|
| M-thread | M 12 × 1.75 | M 16 × 2 | M 18 × 2.5 | M 20 × 2.5 | M 22 × 2.5 | M 24 × 3 | M 27 × 3.0 |
| **Color of thread protector** | Orange | Yellow | Blue | White | Light Pink | Gray | Pastel Green |
| **Bar Ø [mm]** | **25** | **26** | **28** | **30** | **32** | **34** | **40** |
| M-thread | M 30 × 3.5 | M 33 × 3.5 | M 36 × 4 | M 39 × 4.0 | M 42 × 4.5 | M 45 × 4.5 | M 48 × 5.0 |
| **Color of thread protector** | Red | Pearl gold | Black | Turquoise blue | Brown | Anthracite gray | Green |

## Screw-in plastic nailing plate



- Solution for fixing MODIX® to wooden or plywood formwork.
- Is screwed into coupler Part A.
- Is removed directly before fitting Part B.
- Nailing plate thickness is minimum of 10 mm for all diameters of MODIX®.

1. The nailing plate Ⓝ must be attached to the formwork with nails. The magnetic plate Ⓜ can be attached to steel formwork only.

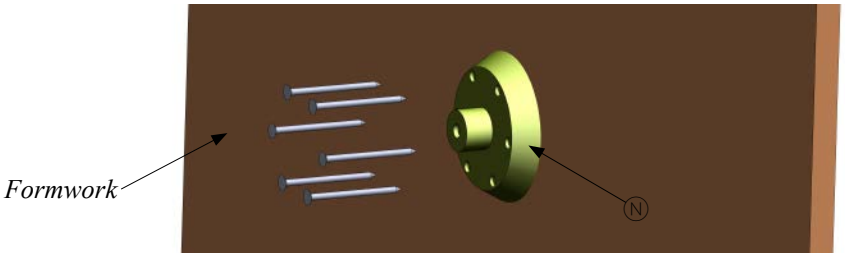


2. Directly before installing MODIX® Part A ①, remove the thread protector ③ from the coupler.

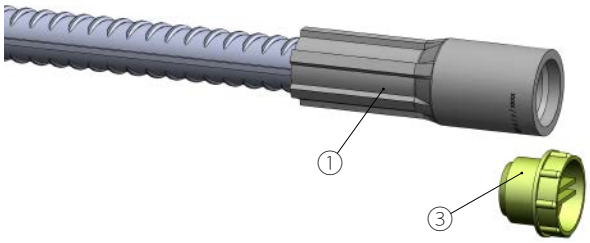


3. MODIX® Part A ① is screwed to the nailing plate Ⓝ or magnetic plate Ⓜ. It is recommended that lubrication be applied to the thread of MODIX® Part A ① to avoid pollution from fresh concrete and also for better handling when removing the thread protector from MODIX®.

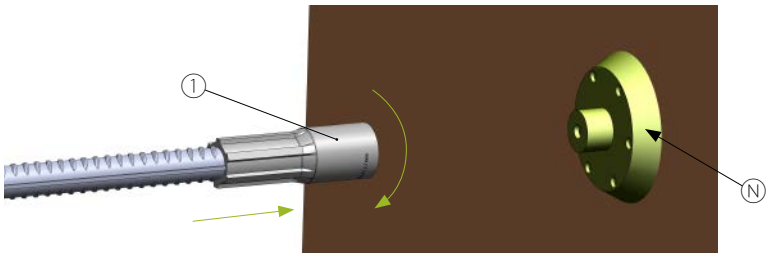


4. When MODIX® Part A ① is fixed with nails or a magnetic plate, the formwork can be filled with concrete. After removing the formwork, the nailing plate Ⓝ or magnetic plate Ⓜ is visible. After the fixation plate is removed, MODIX® Part A is ready for assembly with the counterpart.

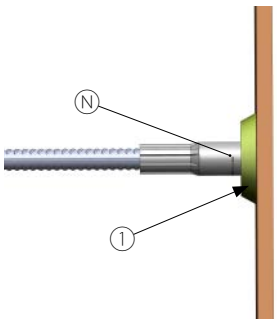




## MODIX® attached to formwork without using a fixation plate

An alternative installation of coupler Part A ① to the formwork is possible using an M thread bolt, which allows the coupler to be fixed to the formwork through a hole made in the formwork.

1. Remove the thread protector ③ from the coupler ①.

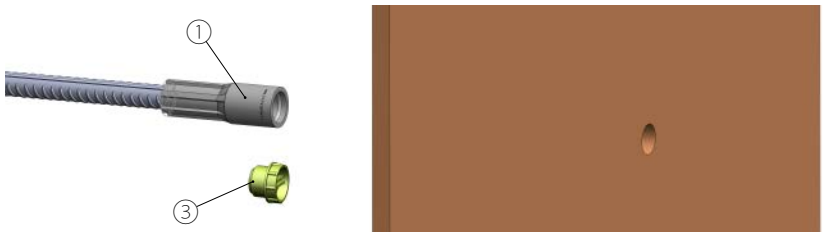


2. Insert the M thread bolt ⑧ through the washer and formwork hole and tighten it with MODIX® Part A ①.

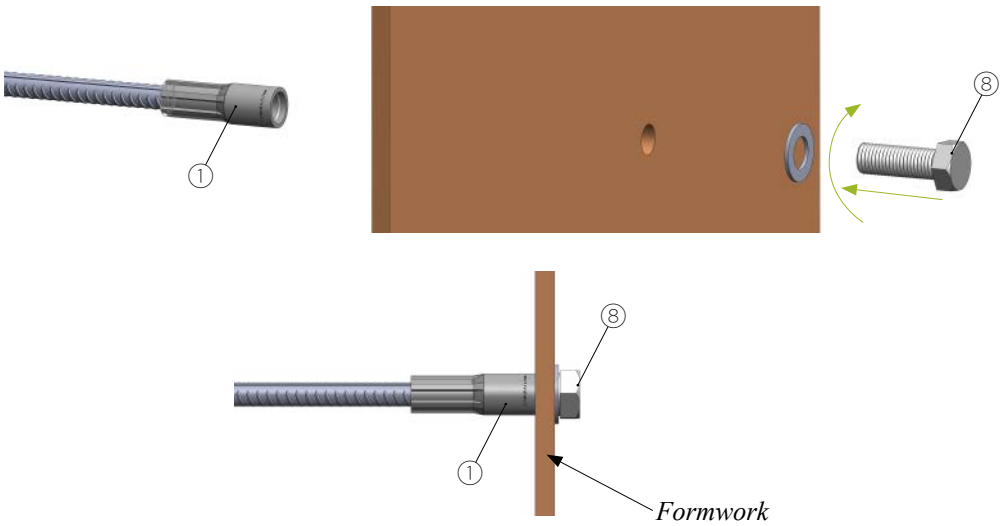


3. After removing the formwork, screw back the thread protector ③. It must be removed directly before assembling the counterpart.

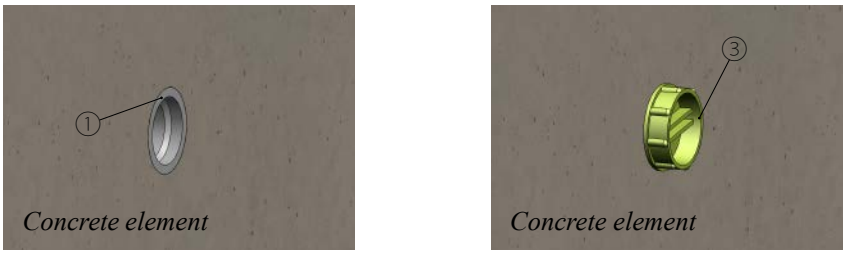

## Requirements for MODIX® not attached to formwork

When MODIX® couplers are not attached to the formwork, it is recommended to cast rebar with MODIX® couplers so that they protrude at least 20 cm above the casting surface to make assembly of the counterpart easier and faster. In addition, the protruding bar solution decreases the risk of thread pollution and damage during the construction process. During casting, the correct position of the MODIX® Rebar Coupler must be ensured by fixing them to the reinforcement of the concrete element.

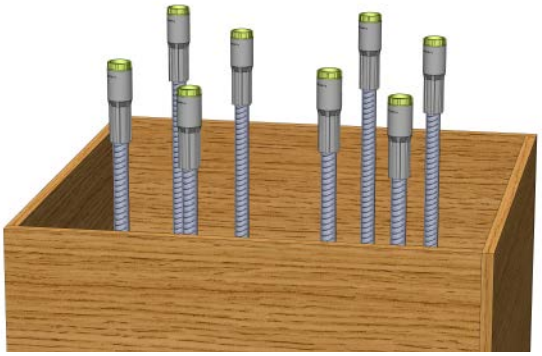

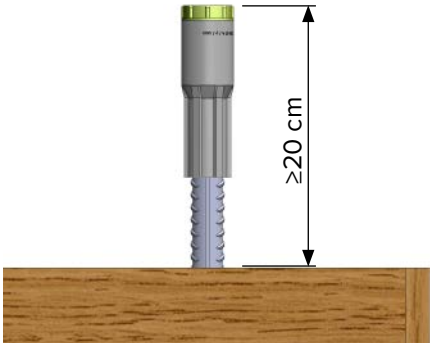


The threads of the MODIX® couplers must be protected by thread protectors during casting. Remove the thread protectors only directly before installing the counterpart couplers.

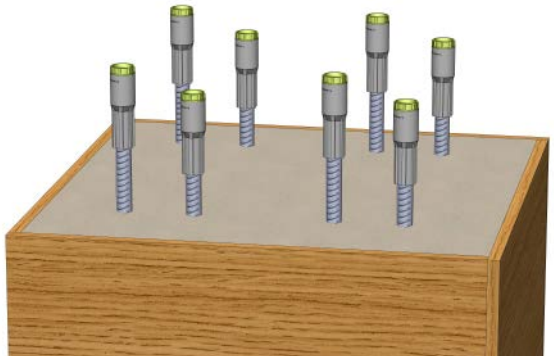

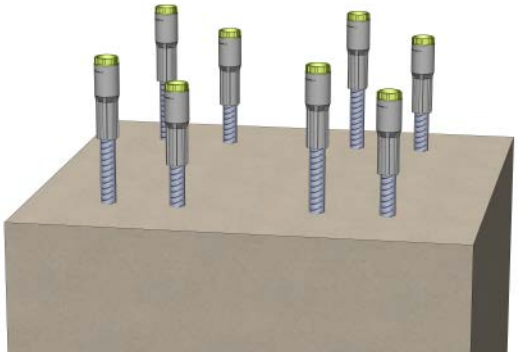

1. If MODIX® must be installed at the casting level (e.g., due to construction requirements), it is recommended to use lubrication around the thread protector to avoid pollution from the fresh concrete and also for better handling when removing the thread protector from MODIX®.

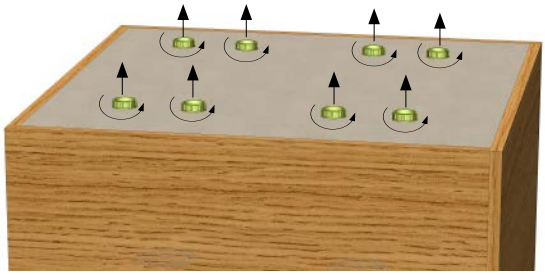



2. If MODIX® is installed at the casting level and used in an environment where there is risk of damage to the plastic thread protector (e.g. in an area where there is the movement of heavy vehicles) after the concrete has hardened, it can be substituted with an M-thread bolt. It is recommended that lubrication is used around the bolt to facilitate the removal of the bolt.

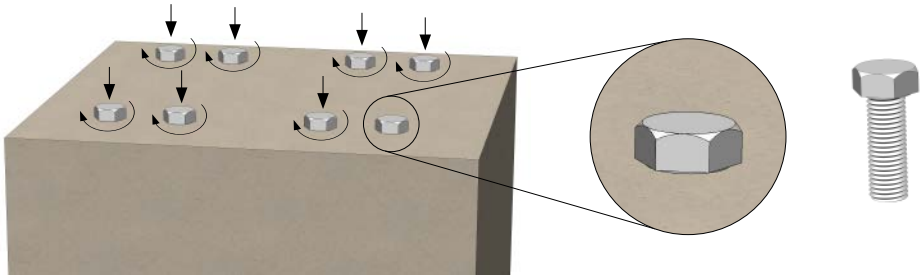

## SM B coupler or RM B coupler connected to MODIX® Part A in concrete element

1. Unscrew the fixation plate (nailing plate Ⓝ or magnetic plate) from Part A ① and remove the thread protective cap ④ directly before installing Part B ②.

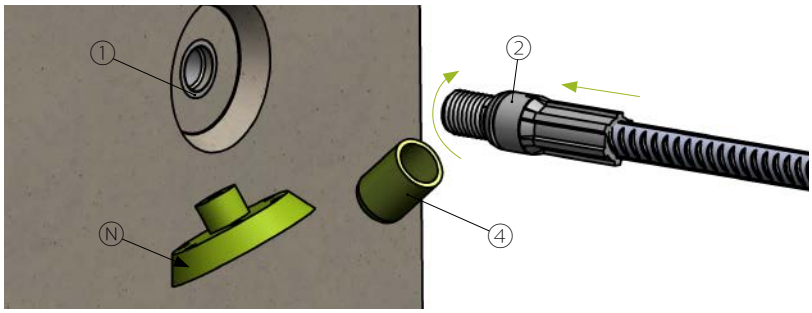


2. Coupler Part B ② is screwed onto coupler Part A ① (already cast in the concrete element). It is tightened using a wrench until the ring gap is completely closed.

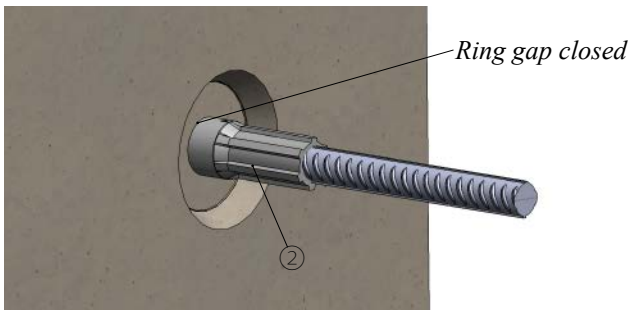

## PM coupler connected with MODIX® Part A in concrete element

1. Remove the nailing plate Ⓝ from coupler Part A ① in the concrete element and the thread protective cap ④ from the MODIX® PM ⑤.

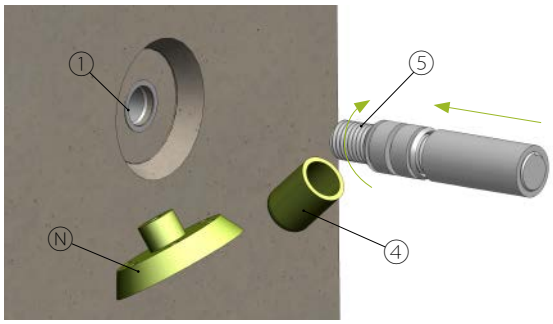


2. Hand-tighten the threaded bar so it sits tightly in coupler Part A ①. Tighten counter nut of MODIX® PM⑦ against coupler Part A ① until the ring gap is closed.

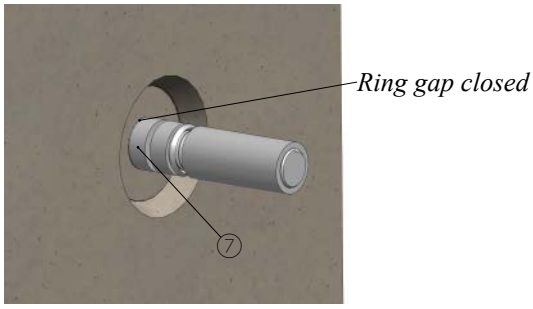


3. Align the thread of coupler Part B ② of the MODIX® PM ⑤.

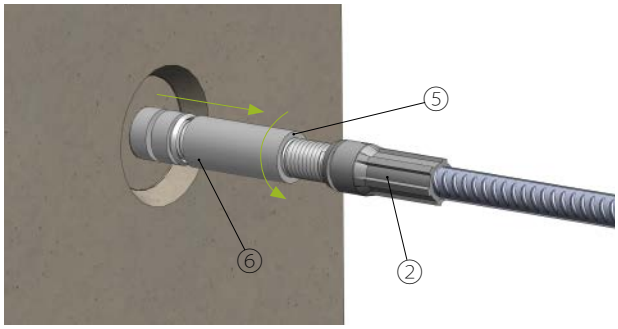


4. Turn the positioning sleeve ⑥ until the ring gap is closed. The second counter nut ⑦ is then tightened against the positioning sleeve until the ring gap is closed.

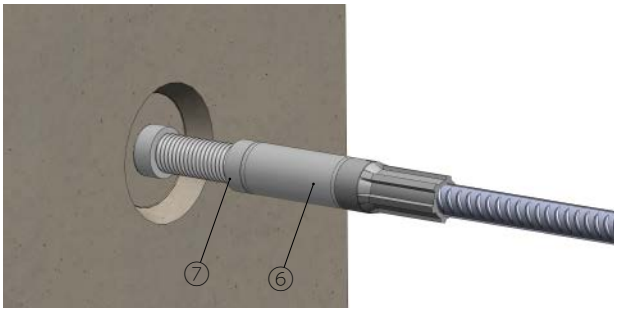

## Installation of ARBOX® Joint Reinforcement with MODIX® Rebar Coupler

Before casting fix the ARBOX® Joint Reinforcement in the planned position by nailing it onto the wooden formwork or connecting it to the existing reinforcement.

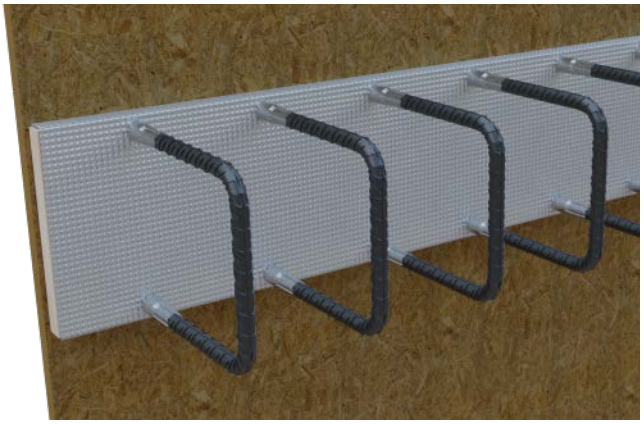

Pour concrete into the formwork.
When the formwork is removed. the ARBOX® steel cover is revealed.

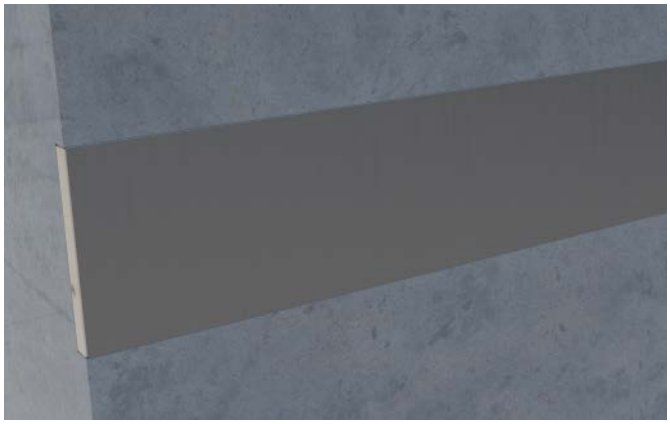

Remove the ARBOX® steel cover by cutting the tapes that secure it, then place the claw of a hammer at one end and pull it away. Remove bolts inside of the steel box by wrench.

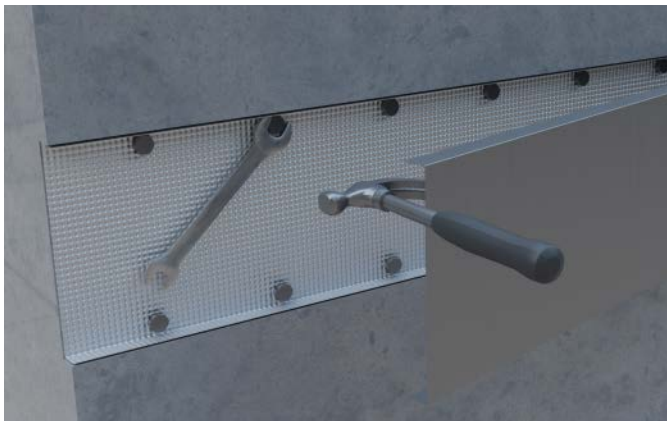

Remove concrete debris and clean interior of the box.

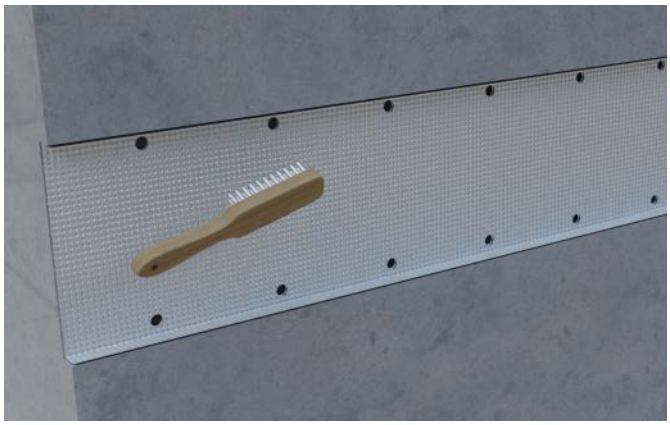

Install the male part of the MODIX® Rebar couplers. MODIX® Rebar couplers are tightened when ring at male part is closed. Rebars are then ready for overlapping with the element's reinforcement. Overlapping length is length $l_0$.

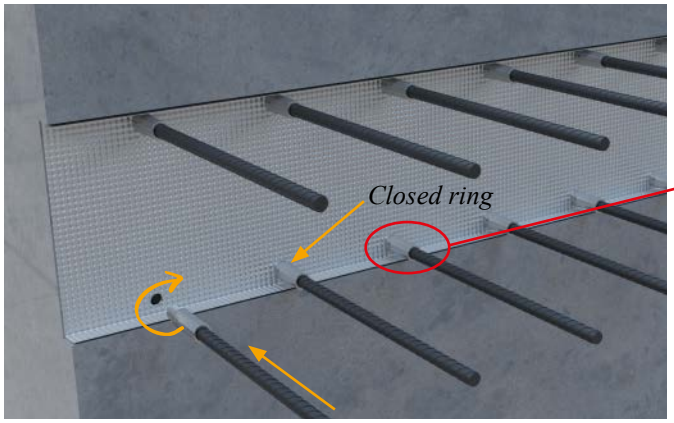


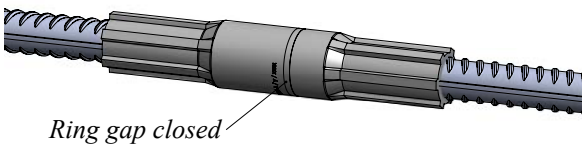

## NOTES

Fastcon

## СРЕДСТВА ПРОЕКТИРОВАНИЯ

Пользуйтесь нашим профессиональным программным обеспечением, чтобы ускорить свою работу, а процесс расчета сделать простым и надежным. Средства проектирования Фасткон включают в себя программное обеспечение для проектирования, 3D компоненты для моделирования, инструкции по установке, технические руководства и сертификаты соответствия продукции Фасткон.

## ТЕХНИЧЕСКАЯ ПОДДЕРЖКА

Команда нашей технической состоит из квалифицированных инженеров и доступна для помощи в составлении расчётов и ответов на ваши технические вопросы по проектированию, установке и применению продукции Фасткон

## СЕРТИФИКАТЫ СООТВЕТСТВИЯ

Сертификаты соответствия, Технические руководства и другие нормативные документы размещены на официальных страницах продуктов на веб-сайте нашей компании.

## ЭКОЛОГИЧЕСКИЕ ДЕКЛАРАЦИИ И СЕРТИФИКАТЫ СИСТЕМЫ МЕНЕДЖМЕНТА

Экологические декларации и сертификаты системы менеджмента размещены в разделе “Качество, окружающая среда и безопасность” на официальном веб-сайте нашей компании.

**ООО «Фасткон»**
**194292, Россия, Санкт-Петербург**
**ул. Домостроительная, д. 16**
**Телефон: +7 (812) 329 07 04**
**www.fastcon.ru**